VENTURA COLLEGE LEARNING RESOURCE CENTER RE-ROOF



BEAM PROFESSIONALS
A DIVISION OF PBK

VENTURA COUNTY COMMUNITY COLLEGE DISTRICT
MOORPARK OXNARD VENTURA

1/27/26
Project: 240378

BEAM Professionals
8163 Rochester Avenue
Suite 100
Rancho Cucamonga, CA 91730
909-987-0909 P
BEAMProf.com

Ventura College Learning Resource Center
4667 Telegraph Rd.,
Ventura, CA 93003
805-289-6286 P
venturacollege.edu

BID SET

G0.0

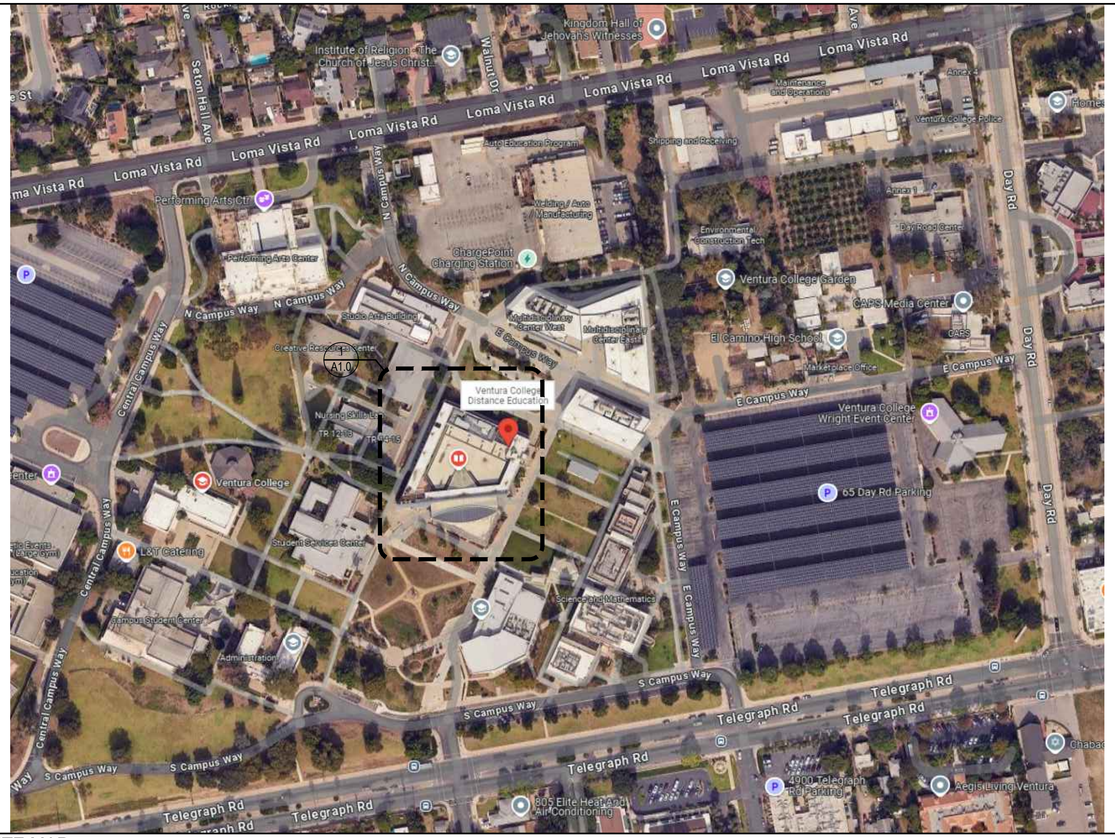

3 SITE MAP
N.T.S.



2 VINCITY MAP
NOT TO SCALE

VENTURA COLLEGE LEARNING RESEOUCE CENTER ROOF/WALL DESIGN

SCOPE OF WORK:

TRANSLUCENT PANELS:
LOBBY SKYLIGHT:
1. A COMPLETE REPLACEMENT OF THE PANELS WITH ALL ASSOCIATED FLASHINGS. EX GUTTER, DOWN SPOUTS, COUNTER FLASHING, DRIP EDGES, BREAK METALS.

LOBBY WALL PANELS:
1. REPLACEMENT OF ALL THE WALL PANELS AND ASSOCIATED FLASHINGS. BREAK METALS TO BE REPLACED TO MATCH EXISTING COLOR.

LIBRARY SKYLIGHT:
1. COMPLETE REPLACEMENT OF SKYLIGHT SYSTEM. SYSTEM TO MATCH EXISTING WITH NO STRUCTURAL ADDITIONS OR CHANGES TO EXISTING STRUCTURAL SUPPORTS.

SMALL SKYLIGHTS:
1. REPLACEMENT OF FOUR SMALL SKYLIGHTS.

TRANSLUCENT PANEL SUPPORT BEAMS:
1. ONCE ALL PANELS ARE REMOVED ALL THE BEAMS WITH CALCIUM/LIME SCALE WILL BE THOROUGHLY CLEAN AND SCRAPPED FREE OF CALCIUM/LIME SCALE BUILD UP.
2. ALL THE AFFECTED DEFINED AREAS WILL RECEIVE A NEW COAT OF PAINT. PER THE AS BUILT, THE PAINT IS TO BE A 1-HOUR FIRE RATED INTUMESCENT PAINT. PAINT ALL BEAMS TO KEEP THE COLOR CONSISTENT THROUGHOUT THE BEAMS.
3.VERIFY ANY EXTENSIVE DAMAGE TO THE EXISTING ENCASED BEAMS ONCE INTUMESCENT PAINT IS REMOVED AND REPAIR OR REPLACE AS NEEDED.
4. ALL EXPOSED BEAMS AND ENCASED BEAMS NEED TO BE FINISHED WITH NEW INTUMESCENT PAINT TO MATCH EXISTING.

INTERIOR GYPSUM:
1. ALL WALL GYPSUM TO BE PAINTED WITH A NEW PAINT. ANY SEVERE DAMAGE TO THE GYPSUM WILL BE REPLACED IN-KIND.
2. CAPTURE CLEANING AND PAINT OF SOFFIT AT BOTH ENTRYWAYS.
3. CLEAN ALL SURFACES (INCLUDING BUT NOT LIMITED TO HANDRAILS, METAL CLADDING PANELS, ETC.) SHOWING CALCIUM LIME SCALE BUILD UP, TYPICAL THROUGHOUT AREAS WITH KALWALL SYSTEM PANELS SUCH AS FOYER,READING ROOM, LIBRARY, NEWS MEDIA ROOM, ETC. (SINCE SCAFFOLD WILL BE UP ALREADY TO ACCESS THESE ELEVATED AREAS).





PATIO:
1. HHS POST REPAIR
ADD SIKALASTIC/ROOF PRO ON ALL POSTS. 3 INCHES ON THE MEMBRANE AND 3" ON THE STEEL. CAN BE APPLIED IN A WHITE COLOR OR A GREY COLOR.
2. REMOVE AND REPLACE TILE IN-KIND IN SPECIFIED AREA.

MAIN ROOF:
1. SEALANT MAINTENANCE.
REMOVE ALL EXISTING SEALANT FROM BOOT PENETRATIONS. APPLY NEW SEALANT COMPATIBLE WITH MANUFACTURER.
2. REGLET REPAIR.
INSTALL COUNTERFLASHING WITH CLIPS AT THE EXISTING REGLET.

HIGH ROOF:
1. SATELLITE DISH
COMPLETELY REMOVE DISH AND DISPOSE. LOCALLY REMOVE AND REPLACE TPO AND SUBSTRATE AT THIS LOCATION WHERE ROOFING SYSTEM IS DEFLECTING.

OVERHEAD PROTECTION:

1. PROVIDE AND EMPLACE OVERHEAD PROTECTION (I.E. SCAFFOLDING) THROUGHOUT FOYER AND LIBRARY TO PERMIT PEDESTRIAN AND FACILITY USE DURING CONSTRUCTION.

SCOPE OF WORK

1. CONTRACTOR SHALL VISIT SITE TO ASCERTAIN EXACT EXISTING CONDITIONS AND COMPONENTS RELATED TO THE WORK DESCRIBED BY THESE DOCUMENTS. AFTER AWARD OF THE CONTRACT, CHANGE ORDER REQUEST FOR ADDITIONAL MONEY SHALL NOT BE APPROVED IF THE WORK COULD HAVE BEEN ANTICIPATED DURING THE SITE VISIT BY THE CONTRACTOR, ALL WORK SHALL BE COMPLETED IN ACCORDANCE WITH ACCEPTED MANUFACTURER'S PRINTED INSTRUCTIONS AND WARRANTY REQUIREMENTS.
2. DIMENSIONS, DETAILS, EQUIPMENT SIZE AND LOCATION SHOWN IN THESE CONSTRUCTION DOCUMENTS ARE FOR CONVEYANCE OF DESIGN INTENT ONLY. EXACT SIZE, LOCATION, TYPE OF MATERIAL AND TYPE OF CONSTRUCTION OF EXISTING CONDITIONS ARE THE RESPONSIBILITY OF THE CONTRACTOR TO ASCERTAIN AND CONFIRM.
3. REFER TO NOMENCLATURE FOR TYPE OF ROOF SYSTEM. ROOF AREAS ARE MARKED WITH DESIGNATED LETTER ON ROOF PLAN.
4. NOTE THAT SOME OF THE DETAILS DRAWN ARE GENERIC IN NATURE AND ARE NOT NECESSARILY LOCATED AND KEYED TO THE ROOF PLANS.
5. INDICATED ROOF HEIGHTS ARE GENERAL IN NATURE.
6. ALL NEW CRICKETS AND TAPERED INSULATION SHALL BE INSTALLED WITH A FINISHED 1/4" PER FOOT MIN. SLOPE. CRICKET THE UP SLOPE SIDE OF ALL SQUARE CURBS AND PROJECTIONS OVER 20" IN WIDTH.
7. REMOVE ALL ABANDONED EQUIPMENT IDENTIFIED ON SITE AND AS SHOWN ON OTHERWISE ON THESE DOCUMENTS.
8. REPLACE ROTTED AND / OR OTHERWISE DETERIORATED ROOF DECK MATERIAL WITH LIKE MATERIAL AND THICKNESS.
9. REPLACE ROTTED AND / OR OTHERWISE DETERIORATED WOOD NAILER MATERIAL WITH LIKE MATERIAL AND THICKNESS.
10. PATCH EXISTING ROOF DECK FOR HOLES LESS THAN 10" WIDE BY ANCHORING 22 GA. STAINLESS STEEL SHEET METAL TO BOTTOM OF EXISTING STEEL ROOF DECK TO MATCH EXISTING THICKNESS. PATCH EXISTING ROOF DECK FOR HOLES GREATER THAN 10" WIDE BY ANCHORING 22 GA. STAINLESS STEEL SHEET METAL TO BOTTOM OF EXISTING GYPSUM ROOF DECK SPANNING FROM JOIST TO JOIST.
11. AS APPLICABLE, ALL HVAC AND / OR DX UNITS, ELECTRICAL TRANSFORMERS, ROOF TOP EQUIPMENT, ETC. THAT ARE ON SLEEPERS SHALL BE DISCONNECTED / REMOVED, RAISED, AND PLACED ON NEW CURBED PLATFORMS AS DETAILED AND REINSTALLED / RECONNECTED. ALL CURB MOUNTED HVAC UNITS, EQUIPMENT, ETC. SHALL HAVE A MINIMUM 8" CURB HEIGHT AND ARE TO BE RAISED AS REQUIRED.
12. ALL DISCONNECTS AND RECONNECTS SHALL BE PERFORMED BY A LICENSED ELECTRICIAN.
13. WORK TO ANY EXISTING UTILITY CONDUIT OR PIPE SHALL BE PERFORMED BY SPECIFIC LICENSED SUBCONTRACTORS SPECIALIZING IN HVAC, PLUMBING AND ELECTRICAL WORK. PERMITS AND INSPECTIONS ARE REQUIRED. REROUTE AND / OR MODIFY UTILITY CONDUIT OR PIPE AS REQUIRED TO BE INSTALLED AS DETAILED.
14. UNLESS INDICATED OTHERWISE ON THE CONSTRUCTION DOCUMENTS, REPLACE AND RAISE (AS REQUIRED) ALL EXISTING EXPANSION JOINTS / AREA DIVIDERS / CURB MOUNTED EQUIPMENT / EXISTING ROOF HATCH/ SKYLIGHTS A MIN. 10" ABOVE ROOF DECK.
15. ALL SOIL STACK FLASHING SHALL BE A MIN. 8" ABOVE FINISHED ROOF SURFACE. COUPLE PVC PIPE ABOVE DECK AND COUPLE CAST IRON PIPE BELOW DECK.
16. ALL PIPING/ CONDUIT/ ETC. SHALL BE A MIN. 8" ABOVE ROOF SURFACE. PROVIDE PORTABLE PIPE HANGERS WITH PROTECTION PADS.
17. PROVIDE SHEET METAL HOODED (WITH METAL FACE CLOSURE) CAPS, WOOD WOOD CURB, BOX COVER AT ALL GAS AND WATER PIPE ROOF PENETRATIONS AS DETAILED. PROVIDE POSITIVE SLOPE AWAY FROM FACE COVER.
18. ISOLATE ALL HEAT PIPES / FLUES AS DETAILED AND RECOMMENDED AND OUTLINED IN THE NRCA MANUAL FOR HOT STACK FLASHING.
19. ALL OUTSIDE AIR INTAKES SHALL BE COVERED TO ELIMINATE ODORS AND FUMES FROM ENTERING INTO THE BUILDING DURING CONSTRUCTION WORK.
20. EXAMINE AND CLEAN ALL EXISTING DRAIN LINES OF DEBRIS AND BLOCKAGE, FLUSH WITH WATER TO ENSURE THAT DRAINS FLOW FREELY. REPAIR EXISTING DRAINS AS REQUIRED.
21. OWNER WILL VERIFY PROPER OPERATION OF ALL ROOF TOP EQUIPMENT BEFORE AND AFTER THE PROJECT. CONTRACTOR SHALL BE RESPONSIBLE FOR IDENTIFYING ALL INOPERABLE EQUIPMENT PRIOR TO RELEASE OF PROJECT.
22. REPLACE ALL RUSTED AND / OR DETERIORATED EXISTING METAL VENT FLASHING AND FLUES.
23. PRIOR TO COMMENCEMENT OF WORK, COORDINATE WALK OF ENTIRE ROOF WITH ROOFING MANUFACTURER'S TECHNICAL REPRESENTATIVE TO IDENTIFY AND LOCATE ALL AREAS OF HIGH SLOPE OR OTHER CONDITIONS WHICH MIGHT REQUIRE SPECIAL PROCEDURES FOR SYSTEM ATTACHMENT.
24. PAINT ALL EXPOSED GAS PIPE TO REMAIN.
25. CONTRACTOR TO INSPECT AND REPAIR DRAINAGE SYSTEMS (LIBRARY, ROOMS 203 & 204), INCLUDING MEMBRANE INSERT DRAINS AND COMPRESSION RINGS AS NEEDED.
26. CONTRACTOR TO INSPECT AND REPLACE PIPE COUPLINGS, THRESHOLDS, AND WATER FOUNTAIN/HOSE BIBS PENETRATIONS WHERE WATER INTRUSION IS EVIDENT.
27. CONTRACTOR TO ADD HVAC PIPING INSULATION IF DETERMINED TO BE A SOURCE OF CONDENSATION LEAKS.
28. BOTH REPAIRS AND REPLACEMENT ITEMS NOTED TO BE CARRIED OUT IN PHASES IN ORDER TO MAINTAIN OPERATIONS OF THE LRC BUILDING.

GENERAL NOTES

APPLICABLE CODES AND STANDARDS

2025 CALIFORNIA ADMINISTRATIVE CODE (CAC)
2025 CALIFORNIA BUILDING CODE (CBC)
2025 CALIFORNIA ELECTRICAL CODE (CEC)
2025 CALIFORNIA MECHANICAL CODE (CMC)
2025 CALIFORNIA PLUMBING CODE (CPC)
2025 CALIFORNIA ENERGY CODE (CEnC)
2025 CALIFORNIA FIRE CODE (CFC)
2025 CALIFORNIA EXISTING BUILDING CODE (CEBC)
2025 CALIFORNIA GREEN BUILDING STANDARDS CODE (CALGREEN)
ALL APPLICABLE CITY OF DAVIS AMENDMENTS

BUILDING OCCUPANCY CATEGORY: B (BUSINESS)

CODE & STANDARDS

1 INDEX OF DRAWINGS

Sheet Number	Sheet Title
G0.0	COVER SHEET
G0.1	GENERAL INFORMATION
A1.0	ROOF PLAN
A1.1	ROOF ACCESS PLAN
A2.0	ELEVATIONS
A3.0	SECTIONS
A4.0	ROOF DETAILS
A4.1	(N) KINGSPAN PYRAMID SKYLIGHT DETAILS
A4.2	(N) KINGSPAN GRIDSPAN RIDGE SKYLIGHT DETAIL
A4.3	(N) KINGSPAN TRANSCURVE SKYLIGHT DETAIL
A4.4	(N) KINGSPAN TRANSCURVE SKYLIGHT DETAIL
A4.5	(N) KINGSPAN UNIGRID WALL SYSTEM DETAILS
RS.1	THIRD LEVEL PATTERN PLAN (FOR REFRENCE ONLY)
RS.2	HIGH ROOF FRAMING PLAN (FOR REFERENCE ONLY)
RS.3	EXTERIOR ELEVATIONS (FOR REFERENCE ONLY)

BEAM PROFESSIONALS
A DIVISION OF PBK

BEAM Professionals
8163 Rochester Avenue
Suite 100
Rancho Cucamonga, CA 91730
909-987-0909 P
BEAMProf.com

VENTURA COLLEGE LEARNING RESOURCE CENTER RE-ROOF

4667 TELEGRAPH RD
VENTURA, CA 93003
VCCCD

VENTURA COUNTY COMMUNITY COLLEGE DISTRICT
MOORPARK OXNARD VENTURA

CLIENT	VCCCD
PROJECT NUMBER	240378
DATE	1/27/26
DRAWN BY	MF
CHECKED BY	GK/JG

REVISIONS

No.	DESCRIPTION	DATE

ISSUED FOR REVIEW

GENERAL INFORMATION

G0.1

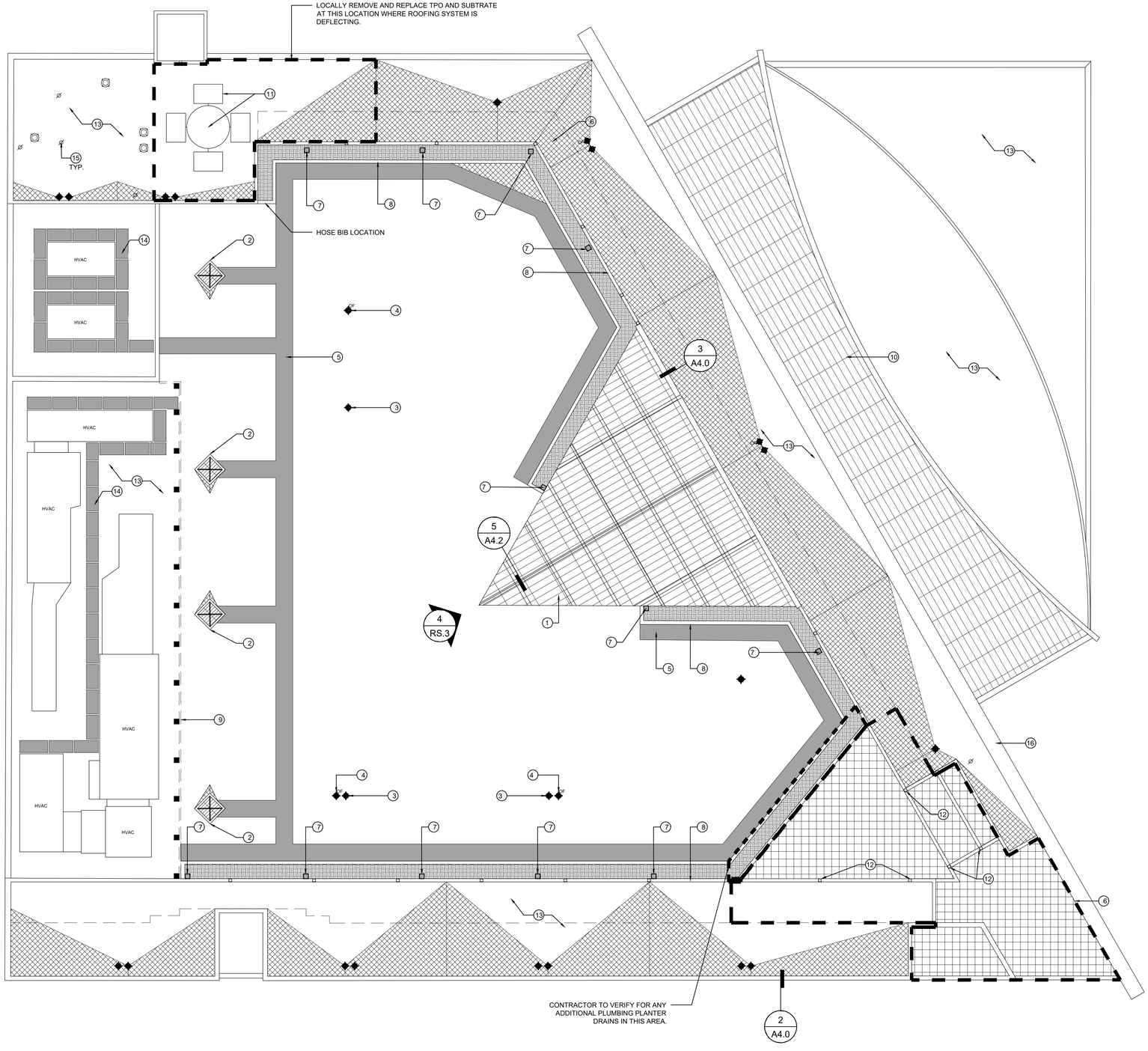

1 ROOF PLAN
SCALE: 3/32"=1'-0"

KALWALL SYSTEM
WALKPADS
TAPERED INSULATION/ CRICKET SEE DETAIL 1/A4.1
PLANTING AREA
SKYLIGHT WITH KALWALL SYSTEM
EXIST. ROOF DRAIN
OF OVERFLOW DRAIN
SCREEN WALL
WALL BELOW
GALV. STEEL COLUMN
HVAC MECH. EQUIP.
CURB MOUNTED VENT
PLUMBING VENT
PLANTER DRAIN

GENERAL LEGEND

1. (E) KALWALL SYSTEM, TO BE REPLACE IN KIND. SEE DETAIL 5/A4.2
2. (E) PYRAMID SKYLIGHT WITH KALWALL SYSTEM, TO BE REPLACE IN KIND, SEE DETAIL 5/A4.1
3. (E) ROOF DRAIN TO REMAIN, PROTECT IN PLACE. CLEAR ALL DRAINS AND TEST TO ENSURE THEY ARE FULLY FUNCTIONAL.
4. (E) O.F. ROOF DRAIN TO REMAIN, PROTECT IN PLACE. CLEAR ALL DRAINS AND TEST TO ENSURE THEY ARE FULLY FUNCTIONAL.
5. (E) WALKING PADS, PROTECT IN PLACE.
6. REMOVE (E) PORCELAIN FLOOR TILE TO DETERMINE EXTENT OF LEAKS IN THIS AREA., REPAIR LEAKS WITH IN-KIND MATERIAL AND REPLACE TILE IN-KIND.
7. WITH PLANTER REMOVAL, CAP OFF (E) IRRIGATION SYSTEM & (E) PLANTER DRAINS.
8. (E) PLANTER WALL TO BE REMOVED (RE: DETAIL 15/A4.0).
9. (E) MECHANICAL SCREEN TO REMAIN, PROTECT IN PLACE.
10. (E) TRANSCURVE SKYLIGHT TO BE REPLACED IN-KIND. SEE DETAIL 5/A4.3 & 5/A4.4
11. REMOVE (E) SATELLITE DISH & ALL ASSOCIATED ITEMS AND REPLACE TPO AND SUBSTRATE WHERE ROOFING SYSTEM IS DEFLECTING.
12. (E) GALVANIZED STEEL COLUMNS; REPLACE (E) FLASHING MEMBRANE WITH A LIQUID FLASHING MEMBRANE, SEE DETAIL 7/A4.0 (APPLICABLE TO ALL PENETRATIONS OF THE ROOF SYSTEM, INCLUDING THE MECHANICAL AREAS).
13. REPLACE TPO FLASHING SYSTEM AND SEALS AT EDGES SUCH AS ROOF TO WALL CONDITIONS AND OTHER VERTICAL SURFACES. THESE ROOFS NEED TO BE WATER TESTED TO ENSURE NO FURTHER LEAKS ARE PRESENT.
14. (N) WALKPADS AT MECHANICAL AREA. SEE DETAIL 8/A4.0
15. REPLACE ALL PIPE PENETRATION SEALANTS. SEE DETAIL 12/AD4.0
16. REMOVE LOW VOLTAGE BIRD ROOSTING PREVENTION MATERIALS AND SEAL IF NECESSARY ALONG THE PARAPET.



KEY NOTES

BEAM Professionals
8163 Rochester Avenue
Suite 100
Rancho Cucamonga, CA 91730
909-987-0909 P
BEAMProf.com

VENTURA COLLEGE LEARNING RESOURCE CENTER RE-ROOF

4667 TELEGRAPH RD
VENTURA, CA 93003
VCCCD

CLIENT	VCCCD
PROJECT NUMBER	240378
DATE	1/27/26
DRAWN BY	MF
CHECKED BY	GK/JG

REVISIONS

No.	DESCRIPTION	DATE

ISSUED FOR REVIEW

ROOF PLAN

A1.0

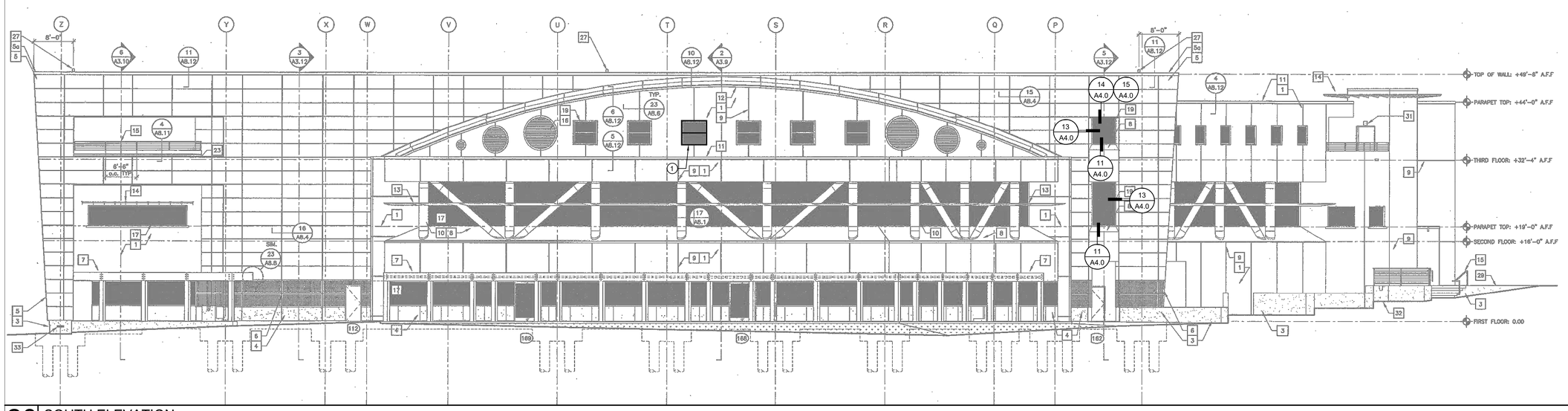

20 SOUTH ELEVATION
SCALE: 3/32"=1'-0"

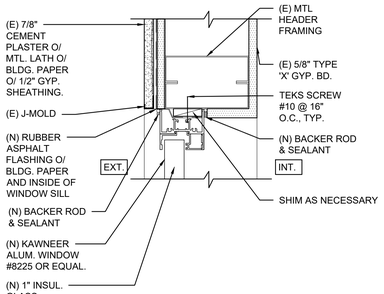

B. HEADER

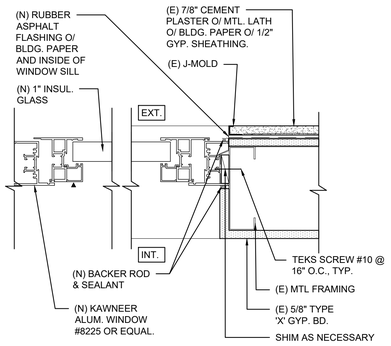

C. JAMB

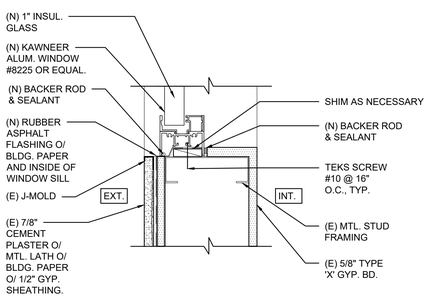

A. SILL

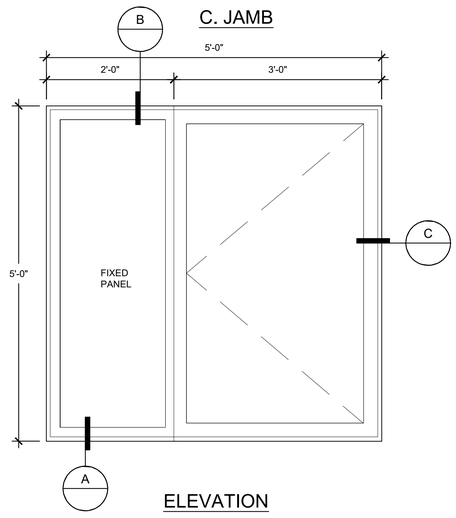

ELEVATION

10 (N) WINDOW DETAIL
SCALE: N.T.S.

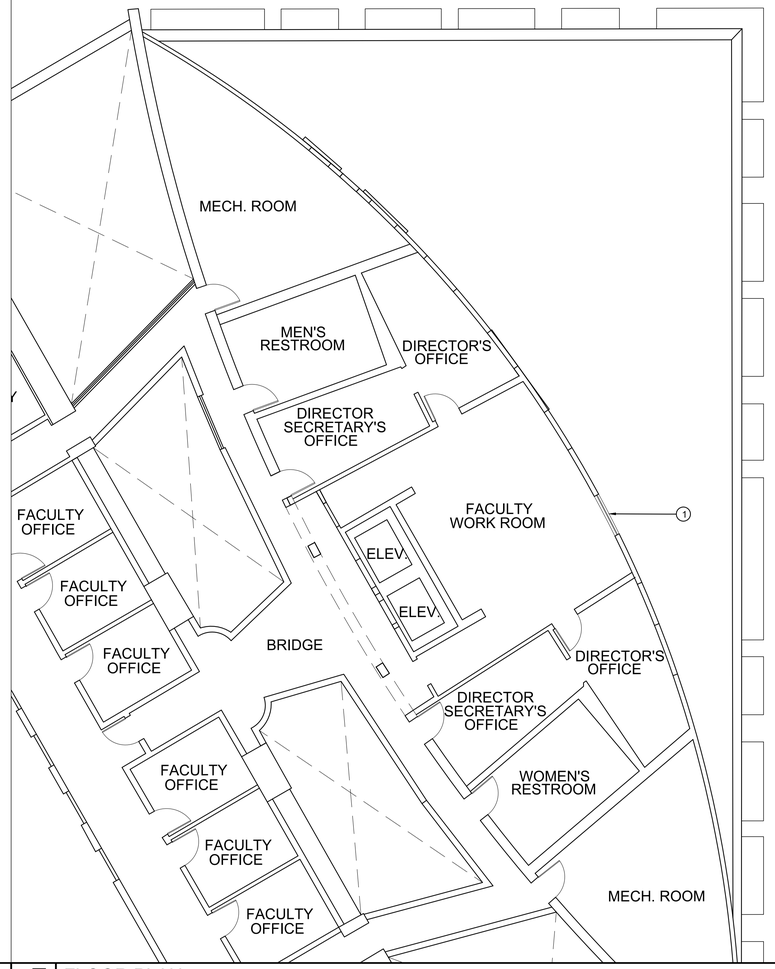

5 FLOOR PLAN
SCALE: 1/8"=1'-0"

1 KEY NOTES

1. (E) WINDOW TO BE REPLACED WITH A SIDE HINGED WINDOW FOR ROOF ACCESS. SEE DETAIL 10/A1.1

BEAM PROFESSIONALS
A DIVISION OF PBK

BEAM Professionals
8163 Rochester Avenue
Suite 100
Rancho Cucamonga, CA 91730
909-987-0909 P
BEAMProf.com

VENTURA COLLEGE LEARNING RESOURCE CENTER RE-ROOF

4667 TELEGRAPH RD
VENTURA, CA 93003
VCCCD

VENTURA COUNTY COMMUNITY COLLEGE DISTRICT
MOORPARK OXNARD VENTURA

CLIENT	VCCCD
PROJECT NUMBER	240378
DATE	1/27/26
DRAWN BY	MF
CHECKED BY	GK/JG

REVISIONS

No.	DESCRIPTION	DATE

ISSUED FOR REVIEW

ROOF ACCESS PLAN

A1.1

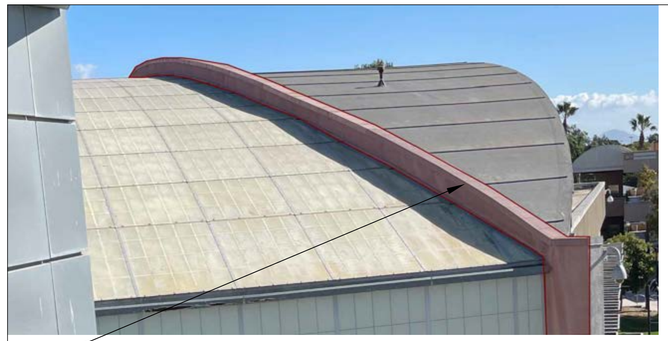



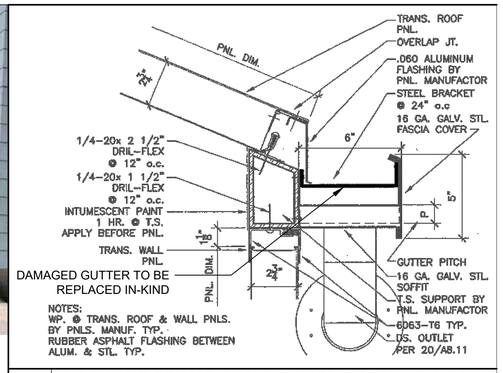

16 SKYLIGHT/TRANS, WALL PANEL DETAIL @ LOBBY
3" = 1'-0"

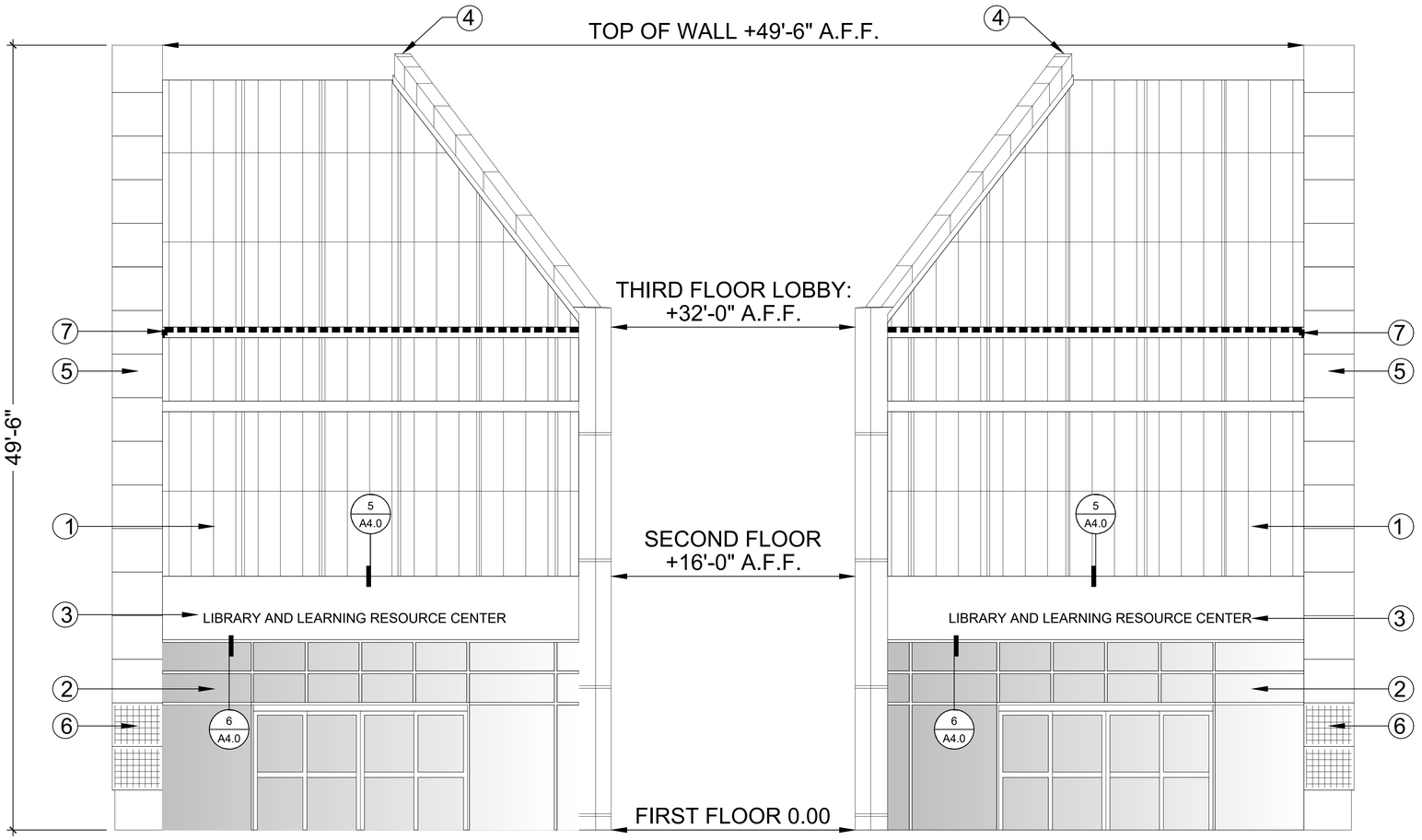

PARTIAL
SOUTH-WEST ELEVATION

PARTIAL
NORTH-EAST ELEVATION

5 EXTERIOR ELEVATIONS
SCALE: 1/4"=1'-0"

1. (E) KALWALL SYSTEM, TO BE REPLACE IN KIND, SEE DETAIL 5/A4.5
2. (E) ALUMINUM STOREFRONT SYSTEM, PROTECT IN PLACE.
3. REPAIR (E) PLASTER. REMOVE AND REINSTALL PIN LETTER SIGNS & PAINT PLASTER TO MATCH
4. DEMO (E) COPING, (E) HT UNDERLAYMENT, (E) STUCCO DOWN TO SUBSTRATE, (E) REGLET AND (E) COUNTER FLASHING AND REPLACE IN-KIND. SEE DETAIL 2/A4.0
5. (E) METAL CLADDING PANEL OVER BUILDING PAPER OVER 1/2" TH. EXTERIOR GYPSUM SHEATHING OVER METAL FRAMING, PROTECT IN PLACE.
6. (E) PERFORATED METAL CLADDING PANEL OVER METAL FRAMING, PROTECT IN PLACE.
7. (E) GUTTER TO BE REPLACED IN KIND. SEE DETAIL 16/A2.0
8. REMOVE, PROTECT AND REINSTALL (E) METAL CLADDING PANEL FOR (N) KINGSPAN INSTALLATION
9. ROOFING SYSTEM AT WINDOW NEEDS TO BE REMOVED AND REPLACED. SEE DETAIL 11/A4.0

1 KEY NOTES

BEAM PROFESSIONALS
A DIVISION OF PBK

BEAM Professionals
8163 Rochester Avenue
Suite 100
Rancho Cucamonga, CA 91730
909-987-0909 P
BEAMProf.com

VENTURA COLLEGE LEARNING
RESOURCE CENTER RE-ROOF
4667 TELEGRAPH RD
VENTURA, CA 93003
VCCCD

VENTURA COUNTY COMMUNITY COLLEGE DISTRICT
MOORPARK OXNARD VENTURA

CLIENT	VCCCD
PROJECT NUMBER	240378
DATE	1/27/26
DRAWN BY	MF
CHECKED BY	GK/JG

REVISIONS

No.	DESCRIPTION	DATE

ISSUED FOR REVIEW

ELEVATIONS

A2.0

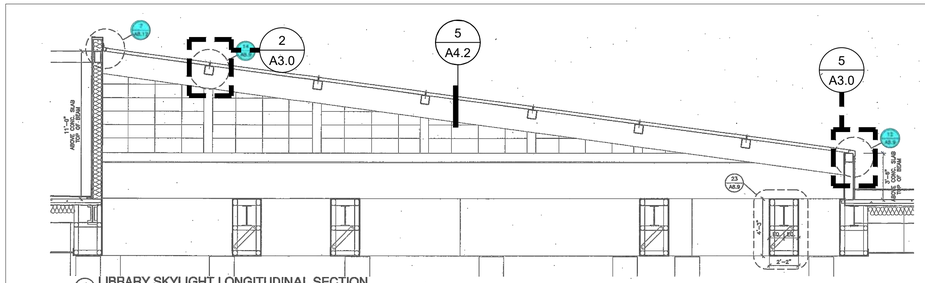

1 LIBRARY SKYLIGHT LONGITUDINAL SECTION
SCALE : 3/8" = 1'-0"

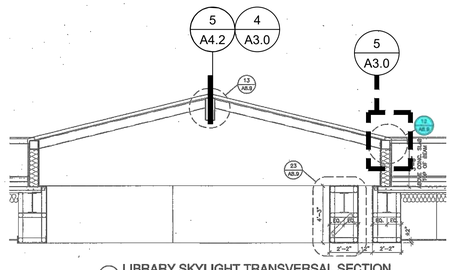

2 LIBRARY SKYLIGHT TRANSVERSAL SECTION
SCALE : 3/8" = 1'-0"

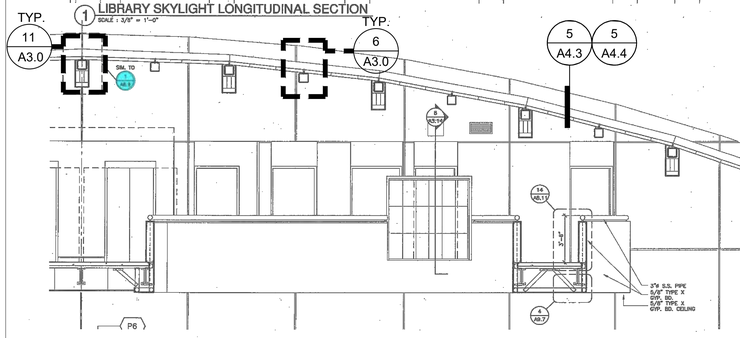

3 LOBBY SKYLIGHT LONGITUDINAL SECTION
SCALE : 3/8" = 1'-0"

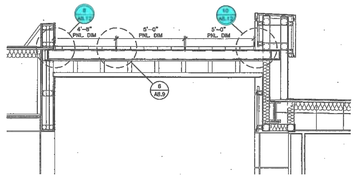

4 LOBBY SKYLIGHT TRANSVERSAL SECTION
SCALE : 3/8" = 1'-0"

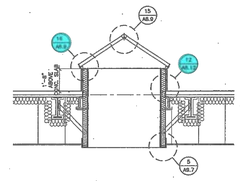

5 LIBRARY PYRAMID SHAPE SKYLIGHT
SCALE : 3/8" = 1'-0"

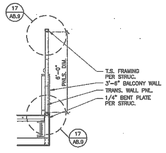

8 TRANS. PNLS. @ BALCONY SECTION
SCALE : 3/8" = 1'-0"

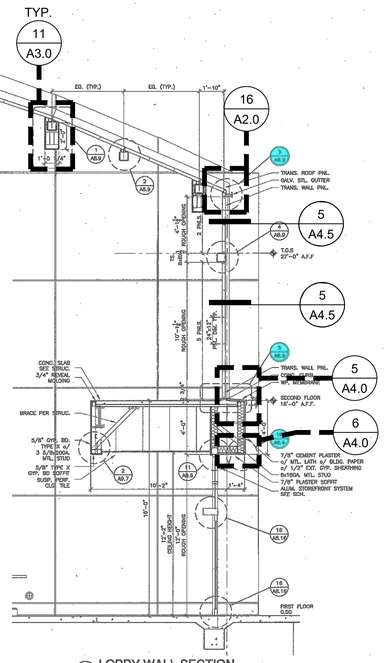

6 LOBBY WALL SECTION
SCALE : 3/8" = 1'-0"

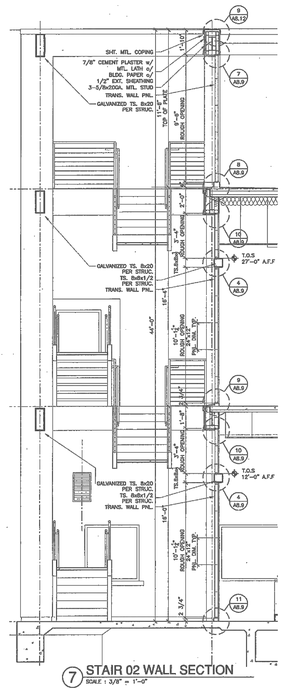

7 STAIR 02 WALL SECTION
SCALE : 3/8" = 1'-0"

NOTE:
SEE SHEET RS.2 FOR STRUCTURAL BEAM SIZES, QUANTITIES AND LOCATIONS.

10 LIBRARY AND LOBBY SKYLIGHT SECTIONS
3/8" = 1'-0"

REMOVE GYP. BD. TO INSPECT BEAM DAMAGE TO INTUMESCENT PAINT, TYP. OF ALL BEAMS IN LIBRARY AREA. REPAINT IN KIND & PAINT TO MATCH ADJ. PAINT COLOR. INTUMESCENT REPAINTING PREPARATION TO BE DONE PER MANUFACTURER'S RECCOMENDATIONS.

NOTES: WP. @ TRANS. ROOF & WALL PANELS. BY PANELS. MANUF. TYP. RUBBER ASPHALT FLASHING BETWEEN ALUM. & STL. TYP.

5 SKYLIGHT DETAIL @ LIBRARY
3" = 1'-0"

INSPECT BEAM DAMAGE & ANY DAMAGE TO INTUMESCENT PAINT, TYP. OF ALL BEAMS IN LIBRARY AREA. REPAINT IN KIND AND PAINT TO MATCH ADJACENT PAINT COLOR. INTUMESCENT REPAINTING PREPARATION TO BE DONE PER MANUFACTURER'S RECOMMENDATIONS.

NOTES: WP. @ TRANS. ROOF & WALL PNLS. BY PNLS. MANUF. TYP. RUBBER ASPHALT FLASHING BETWEEN ALUM. & STL. TYP.

4 SKYLIGHT DETAIL @ LIBRARY
3" = 1'-0"

INSPECT BEAM DAMAGE & ANY DAMAGE TO INTUMESCENT PAINT, TYP. OF ALL BEAMS IN LIBRARY AREA. REPAINT IN KIND AND PAINT TO MATCH ADJACENT PAINT COLOR. INTUMESCENT REPAINTING PREPARATION TO BE DONE PER MANUFACTURER'S RECOMMENDATIONS.

NOTES: WP. @ TRANS. ROOF & WALL PANELS. BY PANELS. MANUF. TYP. RUBBER ASPHALT FLASHING BETWEEN ALUM. & STL. TYP.

2 SKYLIGHT DETAIL @ LIBRARY
3" = 1'-0"

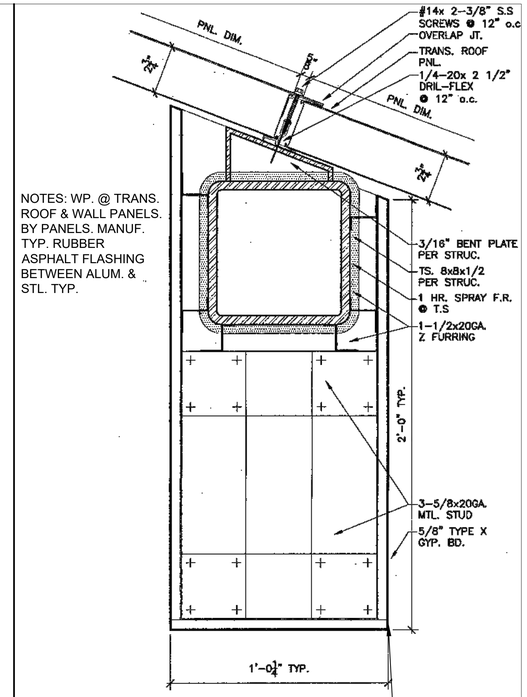

NOTES: WP. @ TRANS. ROOF & WALL PANELS. BY PANELS. MANUF. TYP. RUBBER ASPHALT FLASHING BETWEEN ALUM. & STL. TYP.

REMOVE GYP. BD. TO INSPECT BEAM DAMAGE AND ANY DAMAGE TO INTUMESCENT PAINT, TYPICAL OF 13 WRAPPED BEAMS IN LOBBY AREA. REPLACE IN KIND AND PAINT TO MATCH ADJACENT PAINT COLOR. INTUMESCENT REPAINTING PREPARATION TO BE DONE PER MANUFACTURER'S RECCOMENDATIONS.

11 SKYLIGHT DETAIL @ LOBBY
3" = 1'-0"

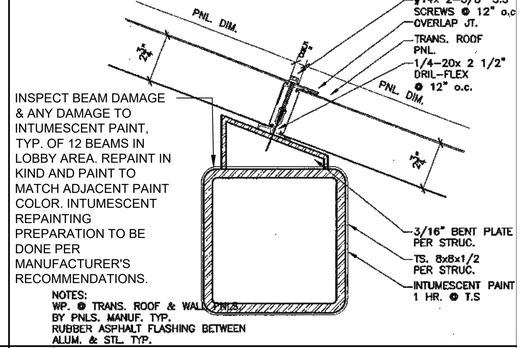

INSPECT BEAM DAMAGE & ANY DAMAGE TO INTUMESCENT PAINT, TYP. OF 12 BEAMS IN LOBBY AREA. REPAINT IN KIND AND PAINT TO MATCH ADJACENT PAINT COLOR. INTUMESCENT REPAINTING PREPARATION TO BE DONE PER MANUFACTURER'S RECOMMENDATIONS.

NOTES:
WP. @ TRANS. ROOF & WALL PNLS.
BY PNLS. MANUF. TYP.
RUBBER ASPHALT FLASHING BETWEEN
ALUM. & STL. TYP.

6 SKYLIGHT DETAIL @ LOBBY
3" = 1'-0"

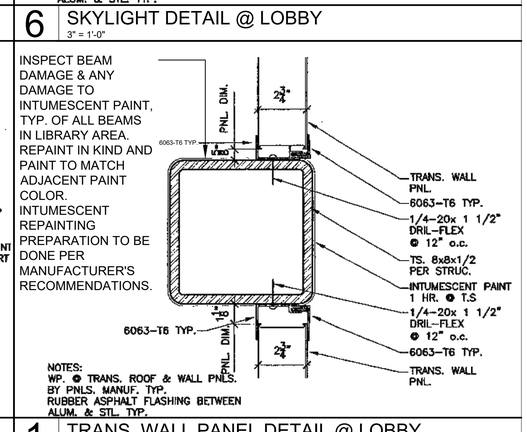

INSPECT BEAM DAMAGE & ANY DAMAGE TO INTUMESCENT PAINT, TYP. OF ALL BEAMS IN LIBRARY AREA. REPAINT IN KIND AND PAINT TO MATCH ADJACENT PAINT COLOR. INTUMESCENT REPAINTING PREPARATION TO BE DONE PER MANUFACTURER'S RECOMMENDATIONS.

NOTES:
WP. @ TRANS. ROOF & WALL PNLS.
BY PNLS. MANUF. TYP.
RUBBER ASPHALT FLASHING BETWEEN
ALUM. & STL. TYP.

1 TRANS. WALL PANEL DETAIL @ LOBBY
3" = 1'-0"

BEAM PROFESSIONALS
A DIVISION OF PBK

BEAM Professionals
8163 Rochester Avenue
Suite 100
Rancho Cucamonga, CA 91730
909-987-0909 P
BEAMProf.com

VENTURA COLLEGE LEARNING RESOURCE CENTER RE-ROOF

4667 TELEGRAPH RD
VENTURA, CA 93003
VCCCD

VENTURA COUNTY COMMUNITY COLLEGE DISTRICT
MOORPARK OXNARD VENTURA

CLIENT	VCCCD
PROJECT NUMBER	240378
DATE	1/27/26
DRAWN BY	MF
CHECKED BY	GK/JG

REVISIONS

No.	DESCRIPTION	DATE

ISSUED FOR REVIEW

SECTIONS

A3.0

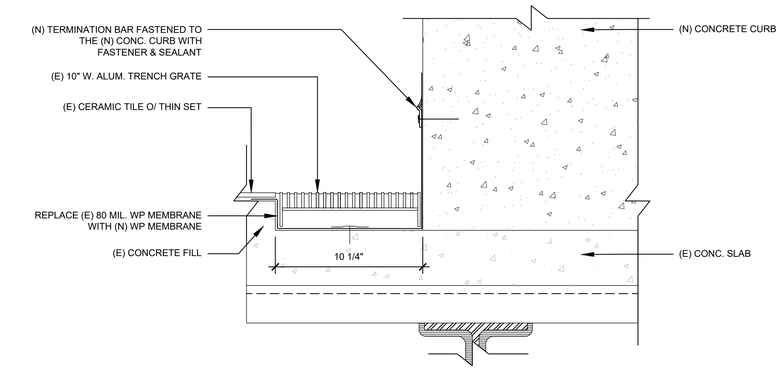

17 (E) TRENCH DETAIL TO (N) CONC. CURB CONNECTION
NOT TO SCALE

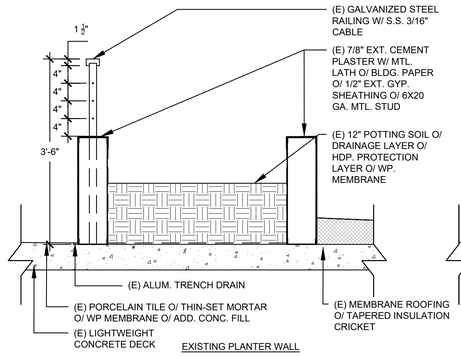

15 (E) PLANTER RETROFIT
SCALE: N.T.S.

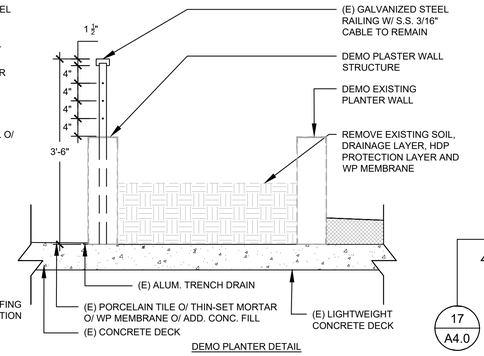

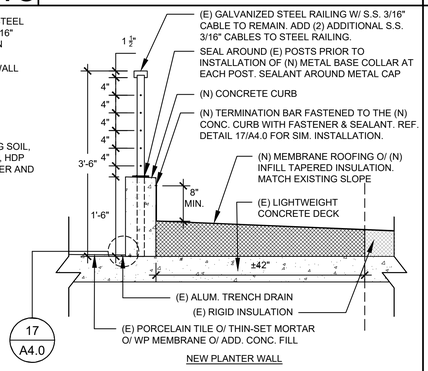

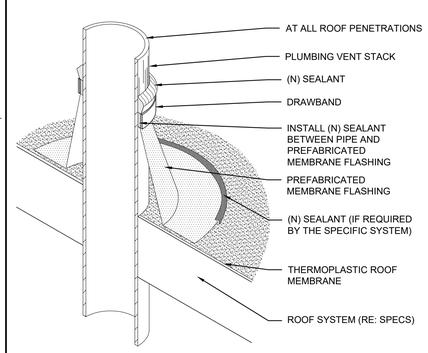

12 (E) PIPE PENETRATION
NOT TO SCALE

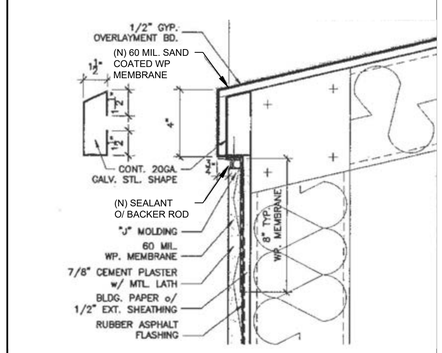

11 WINDOW SILL @ STUCCO
SCALE: N.T.S.

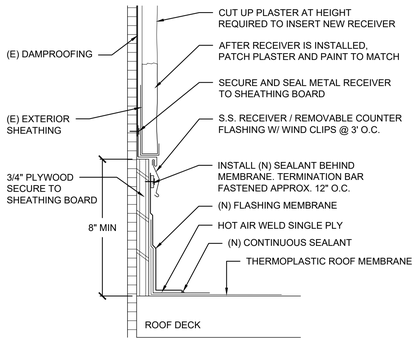

10 (E) PLASTER WALL FLASHING
NOT TO SCALE

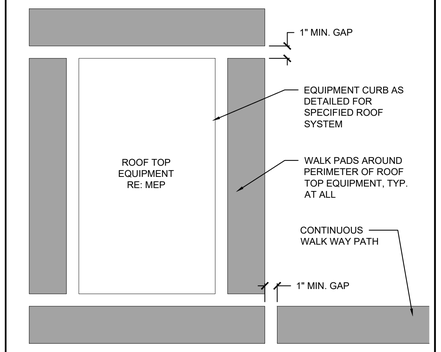

8 (N) WALK PADS
NOT TO SCALE

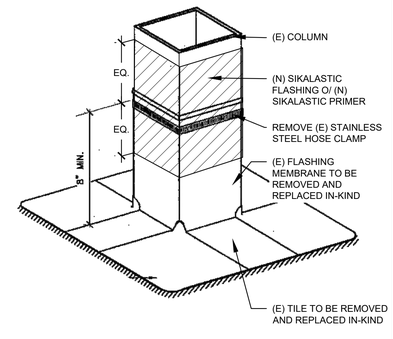

7 LIQUID FLASHING O/ (E) COLUMN BASE
SCALE: N.T.S.

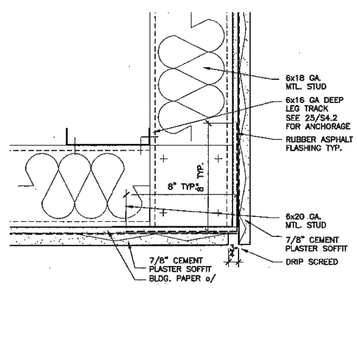

6 SOFFIT DETAIL
SCALE: N.T.S.

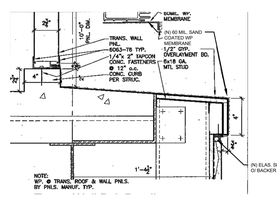

5 TRANS. WALL PANEL DETAIL 2
SCALE: N.T.S.

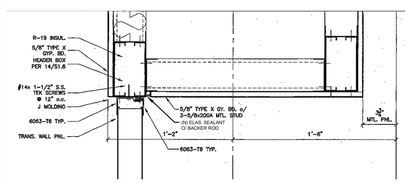

4 TRANS. WALL PANEL DETAIL 1
SCALE: N.T.S.

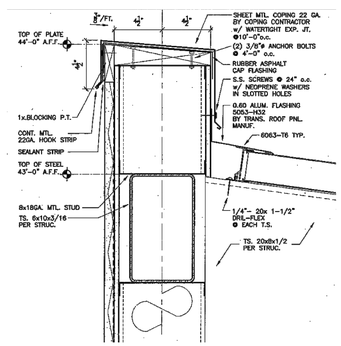

3 PARAPET @ (E) KALWALL SYSTEM
SCALE: N.T.S.

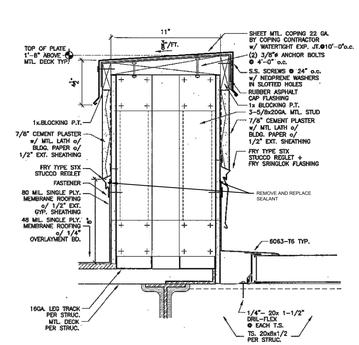

2 PARAPET DETAIL
SCALE: N.T.S.

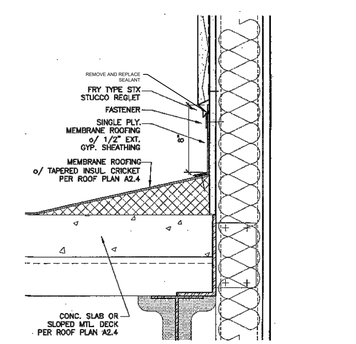

1 SINGLE PLY CRICKET
SCALE: N.T.S.

BEAM Professionals
8163 Rochester Avenue
Suite 100
Rancho Cucamonga, CA 91730
909-987-0909 P
BEAMProf.com

VENTURA COLLEGE LEARNING RESOURCE CENTER RE-ROOF

4667 TELEGRAPH RD
VENTURA, CA 93003
VCCCD

CLIENT	VCCCD
PROJECT NUMBER	240378
DATE	1/27/26
DRAWN BY	MF
CHECKED BY	GK/JG

REVISIONS

No.	DESCRIPTION	DATE

ISSUED FOR REVIEW

ROOF DETAILS

A4.0

PLAN VIEW

NOT TO SCALE

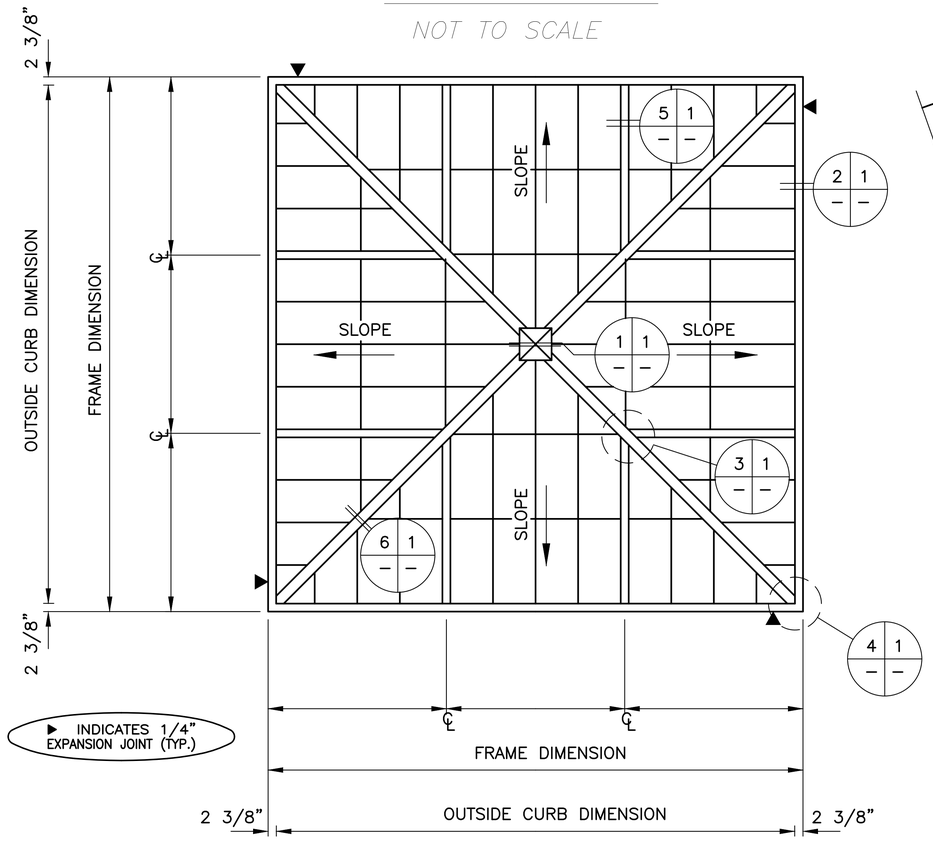

▶ INDICATES 1/4" EXPANSION JOINT (TYP.)

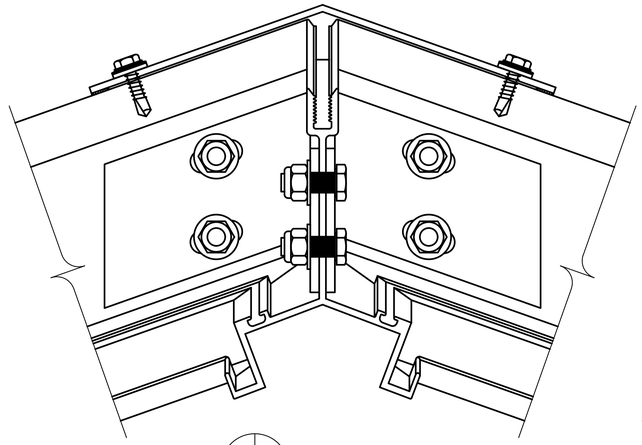

1 1 COMPRESSION STAR
SCALE: 3/4" = 1"

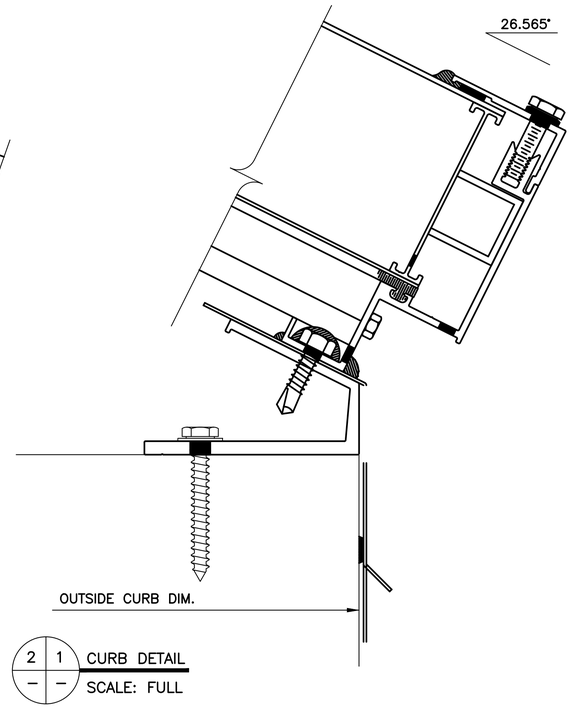

2 1 CURB DETAIL
SCALE: FULL

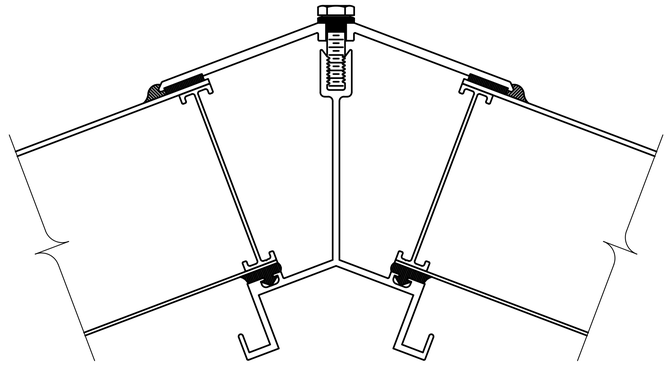

6 1 HIP DETAIL
SCALE: FULL

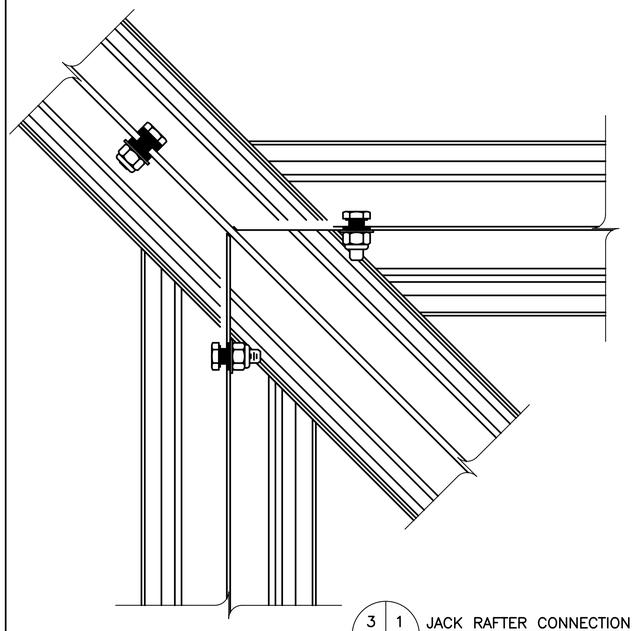

3 1 JACK RAFTER CONNECTION
SCALE: 3/4" = 1"

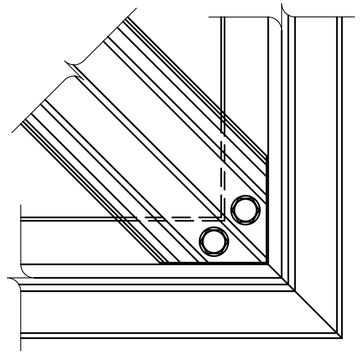

4 1 HIP CONNECTION DETAIL
SCALE: 3/4" = 1"

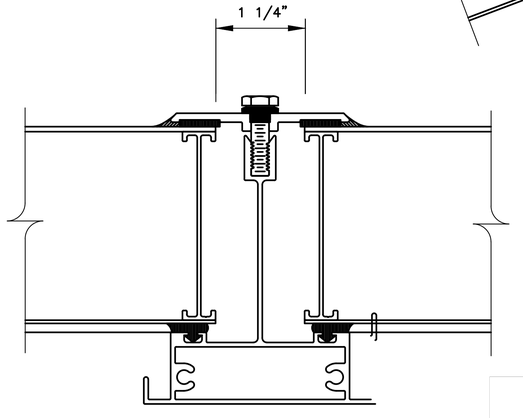

5 1 RAFTER DETAIL
SCALE: FULL

Kingspan.
Light + Air

a: 28662 Ballard Drive,
Lake Forest, IL 60045
t: 847-816-1060
www.kingspan.com/us

5 KINGSPAN PYRAMID SKYLIGHT DETAIL
SCALE: N.T.S.

BEAM PROFESSIONALS
A DIVISION OF PBK

BEAM Professionals
8163 Rochester Avenue
Suite 100
Rancho Cucamonga, CA 91730
909-987-0909 P
BEAMProf.com

VENTURA COLLEGE LEARNING RESOURCE CENTER RE-ROOF
4667 TELEGRAPH RD
VENTURA, CA 93003
VCCCD

VENTURA COUNTY COMMUNITY COLLEGE DISTRICT
MOORPARK OXNARD VENTURA

CLIENT	VCCCD
PROJECT NUMBER	240378
DATE	1/27/26
DRAWN BY	MF
CHECKED BY	GK/JG

REVISIONS

No.	DESCRIPTION	DATE

ISSUED FOR REVIEW

(N) KINGSPAN PYRAMID SKYLIGHT DETAILS

A4.1

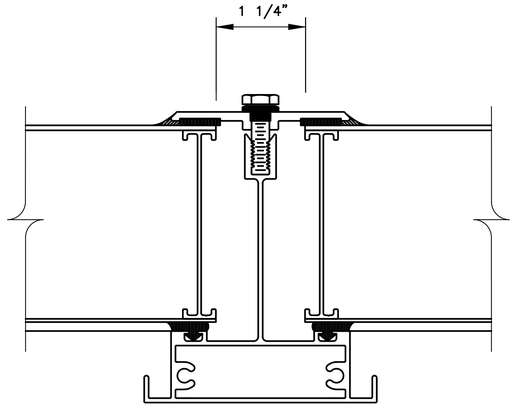

1 1 RAFTER DETAIL
SCALE: FULL

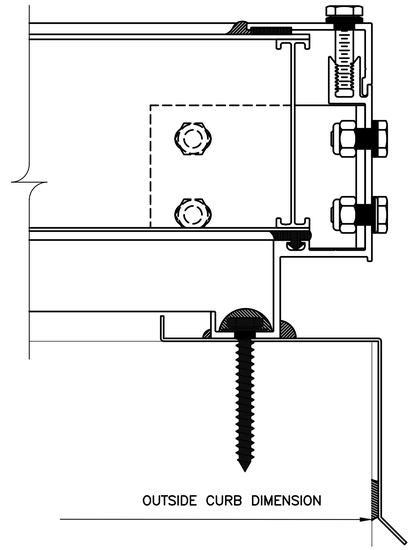

2 2 JAMB DETAIL
SCALE: FULL

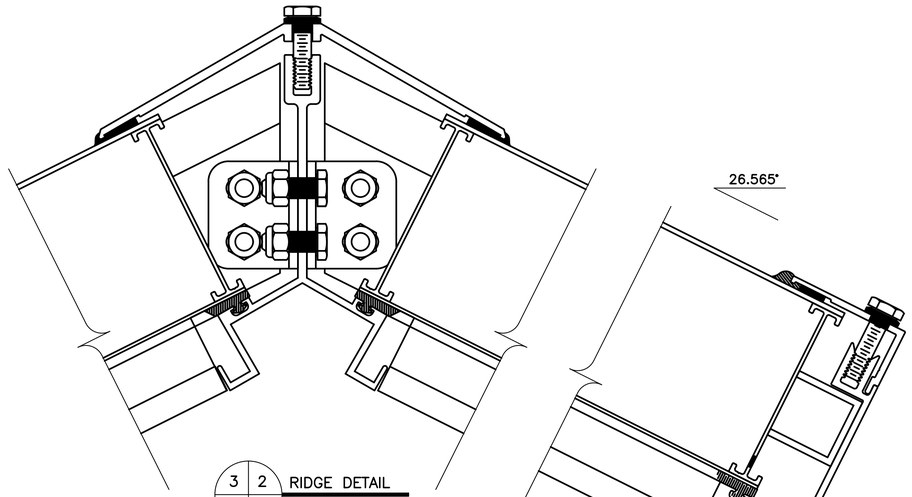

3 2 RIDGE DETAIL
SCALE: FULL

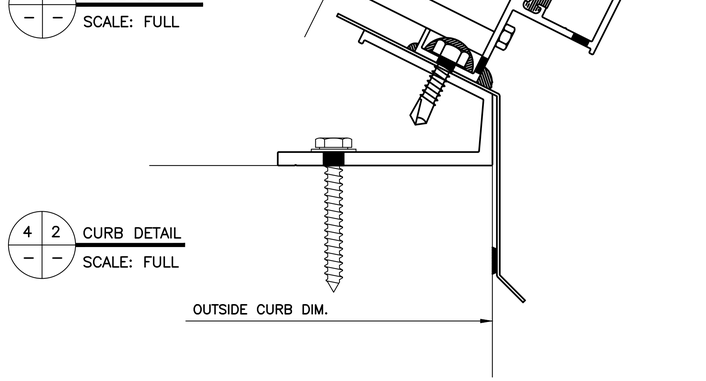

4 2 CURB DETAIL
SCALE: FULL

5 KINSPAN GRIDSPAN RIDGE SKYLIGHT DETAIL
SCALE: N.T.S.

Kingspan.
Light + Air

a: 28662 Ballard Drive,
Lake Forest, IL 60045
t: 847-816-1060
www.kingspan.com/us

BEAM PROFESSIONALS
A DIVISION OF PBK

BEAM Professionals
8163 Rochester Avenue
Suite 100
Rancho Cucamonga, CA 91730
909-987-0909 P
BEAMProf.com

VENTURA COLLEGE LEARNING RESOURCE CENTER RE-ROOF
4667 TELEGRAPH RD
VENTURA, CA 93003
VCCCD

VENTURA COUNTY COMMUNITY COLLEGE DISTRICT
MOORPARK OXNARD VENTURA

CLIENT	VCCCD
PROJECT NUMBER	240378
DATE	1/27/26
DRAWN BY	MF
CHECKED BY	GK/JG

REVISIONS

No.	DESCRIPTION	DATE

ISSUED FOR REVIEW

(N) KINGSPAN GRIDSPAN RIDGE SKYLIGHT DETAIL

A4.2

PLAN VIEW

NOT TO SCALE

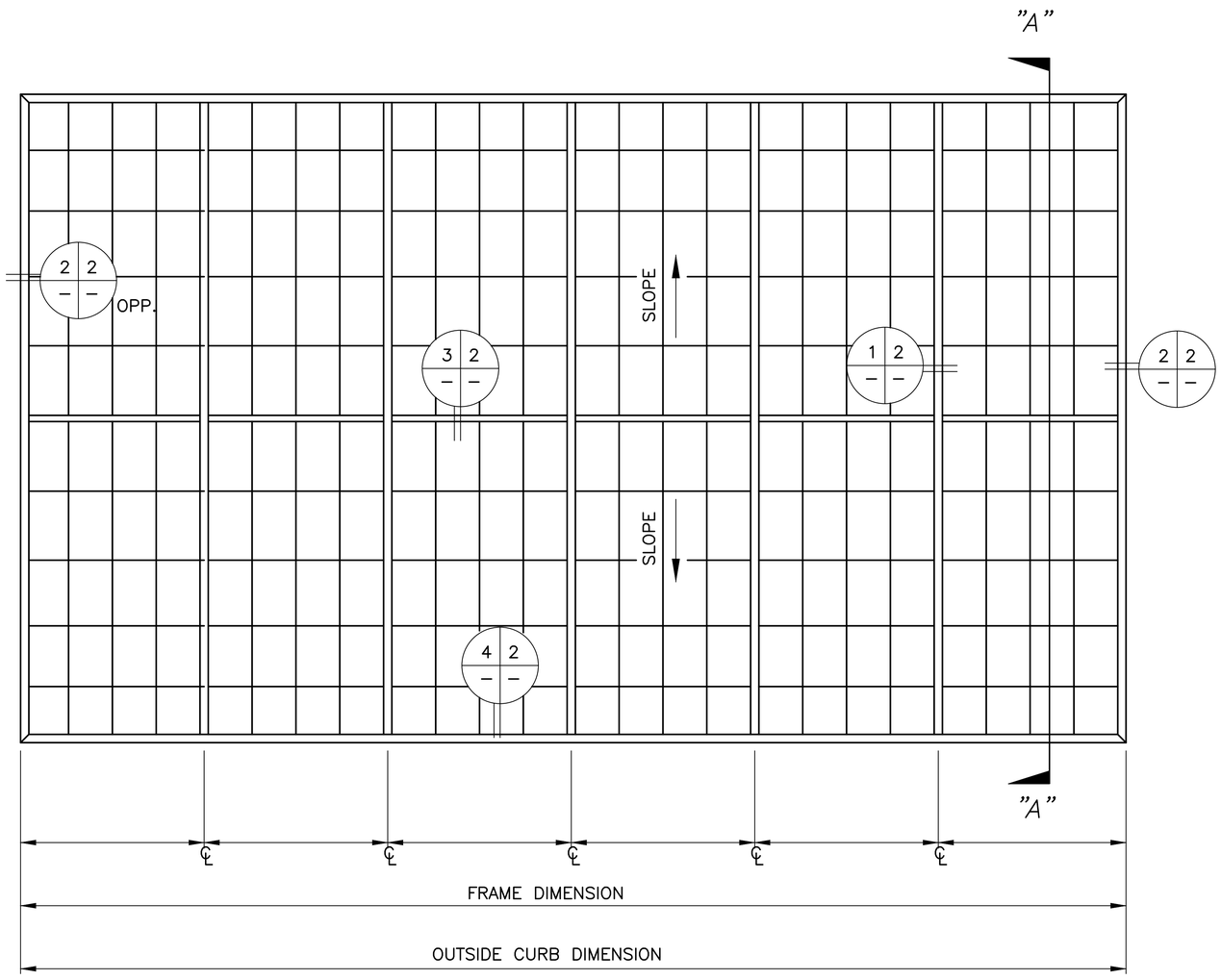

5 KINSPAN GRIDSPAN TRANSCURVE SKYLIGHT DETAIL (SIMILAR)
SCALE: N.T.S.

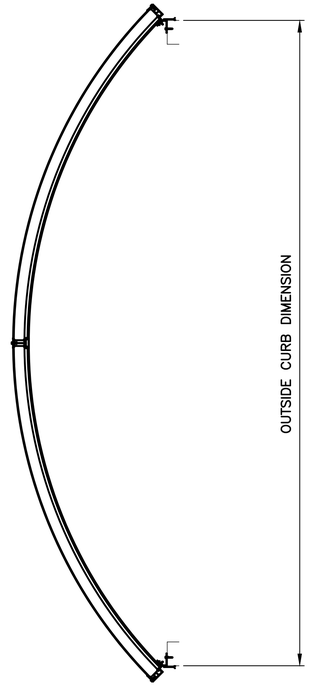

A SECTION VIEW
NOT TO SCALE

Kingspan
Light + Air

a: 28662 Ballard Drive,
Lake Forest, IL 60045
t: 847-816-1060
www.kingspan.com/us

BEAM PROFESSIONALS
A DIVISION OF PBK

BEAM Professionals
8163 Rochester Avenue
Suite 100
Rancho Cucamonga, CA 91730
909-987-0909 P
BEAMProf.com

VENTURA COLLEGE LEARNING RESOURCE CENTER RE-ROOF

4667 TELEGRAPH RD
VENTURA, CA 93003
VCCCD

VENTURA COUNTY COMMUNITY COLLEGE DISTRICT
MOORPARK OXNARD VENTURA

CLIENT	VCCCD
PROJECT NUMBER	240378
DATE	1/27/26
DRAWN BY	MF
CHECKED BY	GK/JG

REVISIONS

No.	DESCRIPTION	DATE

ISSUED FOR REVIEW

(N) KINGSPAN TRANSCURVE SKYLIGHT DETAIL

A4.3

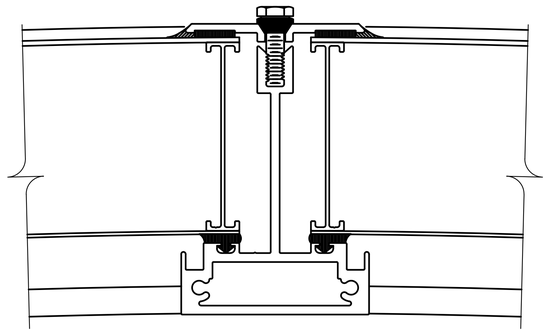

3 | 2 — PURLIN DETAIL
SCALE: FULL

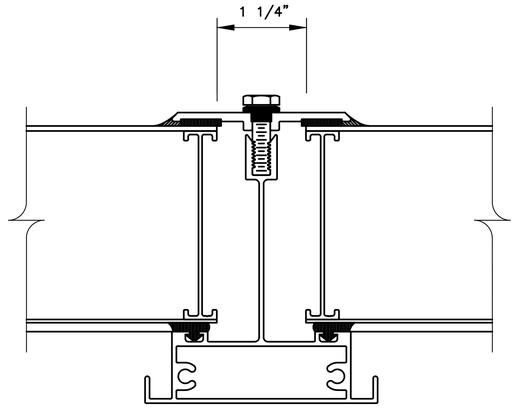

1 | 2 — RAFTER DETAIL
SCALE: FULL

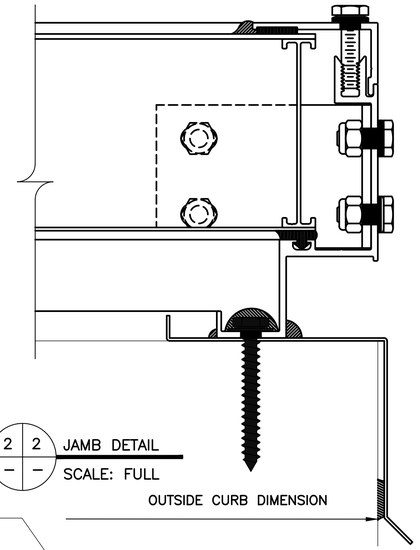

2 | 2 — JAMB DETAIL
SCALE: FULL

OUTSIDE CURB DIMENSION

ALTERNATE DETAIL:
W/ VERTICAL WALLS @ ENDS
(FULL SCALE)

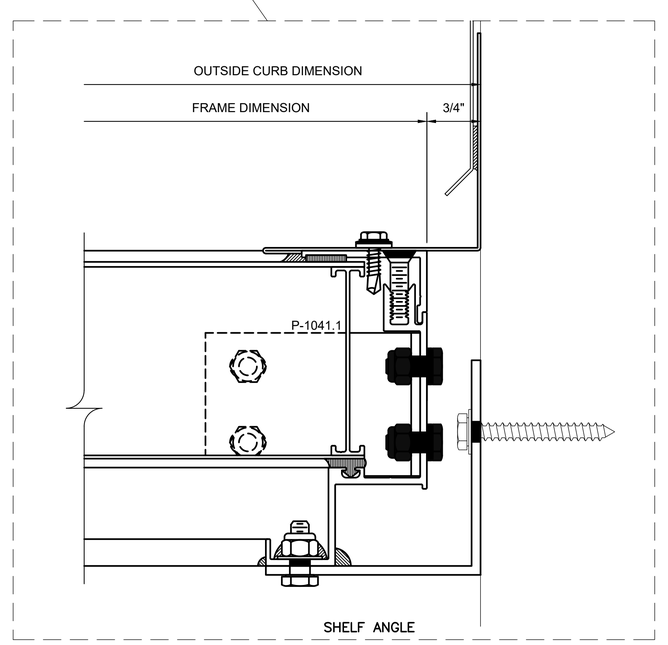

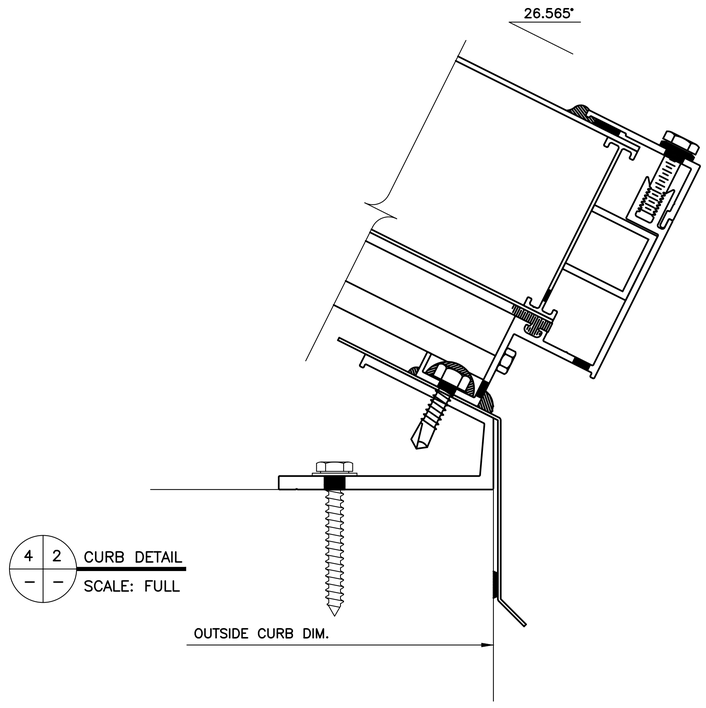

4 | 2 — CURB DETAIL
SCALE: FULL

5 KINSPAN GRIDSPAN TRANSCURVE SKYLIGHT DETAIL
SCALE: N.T.S.

Kingspan.
Light + Air

a: 28662 Ballard Drive,
Lake Forest, IL 60045
t: 847-816-1060
www.kingspan.com/us

BEAM PROFESSIONALS
A DIVISION OF PBK

BEAM Professionals
8163 Rochester Avenue
Suite 100
Rancho Cucamonga, CA 91730
909-987-0909 P
BEAMProf.com

VENTURA COLLEGE LEARNING RESOURCE CENTER RE-ROOF

4667 TELEGRAPH RD
VENTURA, CA 93003
VCCCD

VENTURA COUNTY COMMUNITY COLLEGE DISTRICT
MOORPARK OXNARD VENTURA

CLIENT	VCCCD
PROJECT NUMBER	240378
DATE	1/27/26
DRAWN BY	MF
CHECKED BY	GK/JG

REVISIONS

No.	DESCRIPTION	DATE

ISSUED FOR REVIEW

(N) KINGSPAN
TRANSCURVE SKYLIGHT
DETAIL

A4.4

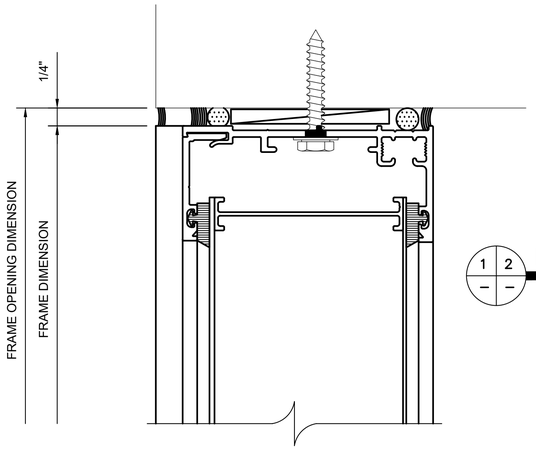

1 2 — — HEAD DETAIL
SCALE: FULL

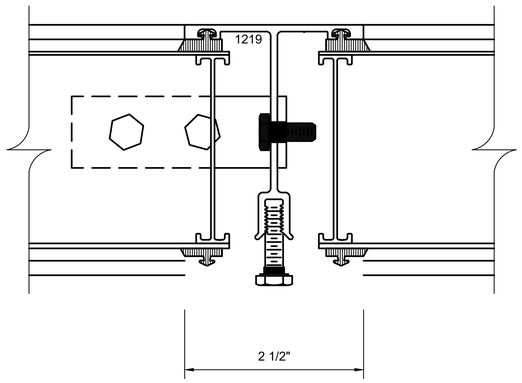

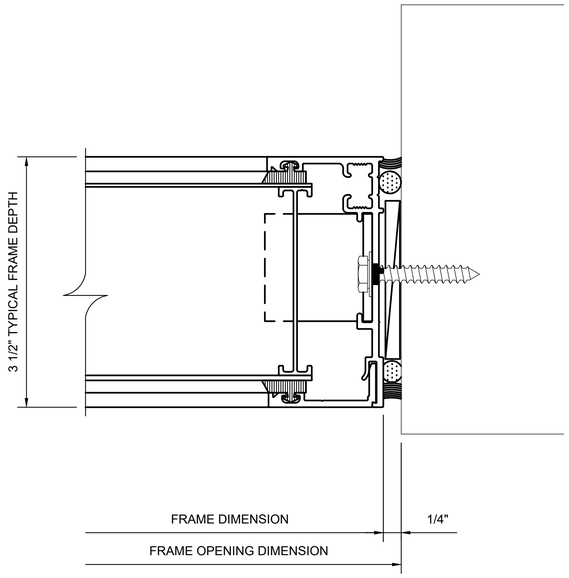

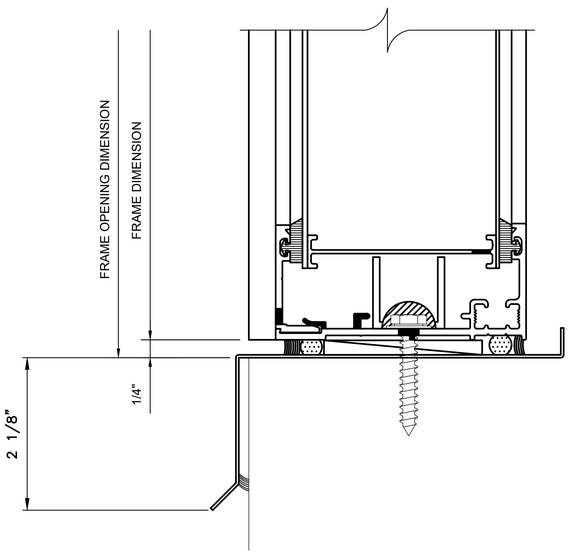

2 2 — — SILL DETAIL
SCALE: FULL

3 2 — — MULLION DETAIL
SCALE: FULL

4 2 — — JAMB DETAIL
SCALE: FULL

5 KINSPAN GRIDSPAN UNGRID WALL SYSTEM DETAILS
SCALE: N.T.S.

Kingspan.
Light + Air
a: 28662 Ballard Drive,
Lake Forest, IL 60045
t: 847-816-1060
www.kingspan.com/us

BEAM PROFESSIONALS
A DIVISION OF PBK
BEAM Professionals
8163 Rochester Avenue
Suite 100
Rancho Cucamonga, CA 91730
909-987-0909 P
BEAMProf.com

VENTURA COLLEGE LEARNING RESOURCE CENTER RE-ROOF

4667 TELEGRAPH RD
VENTURA, CA 93003
VCCCD

CLIENT	VCCCD
PROJECT NUMBER	240378
DATE	1/27/26
DRAWN BY	MF
CHECKED BY	GK/JG

REVISIONS

No.	DESCRIPTION	DATE

ISSUED FOR REVIEW

(N) KINGSPAN UNIGRID WALL SYSTEM DETAILS

A4.5

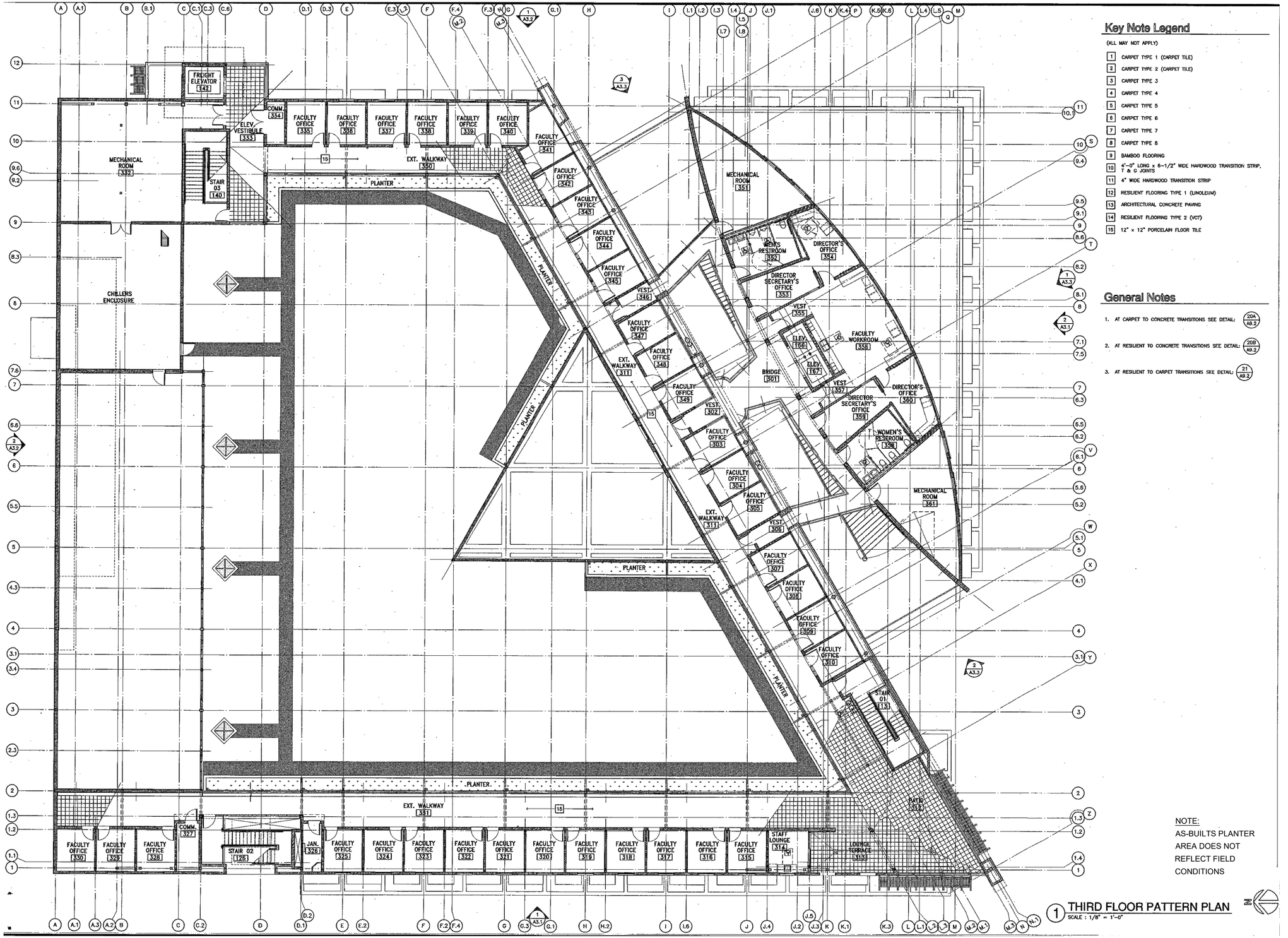

1 THIRD FLOOR PATTERN PLAN
SCALE : 1/8" = 1'-0"

Key Note Legend

(ALL MAY NOT APPLY)

1. CARPET TYPE 1 (CARPET TILE)
2. CARPET TYPE 2 (CARPET TILE)
3. CARPET TYPE 3
4. CARPET TYPE 4
5. CARPET TYPE 5
6. CARPET TYPE 6
7. CARPET TYPE 7
8. CARPET TYPE 8
9. BAMBOO FLOORING
10. 4'-0" LONG x 6-1/2" WIDE HARDWOOD TRANSITION STRIP, T & G JOINTS
11. 4" WIDE HARDWOOD TRANSITION STRIP
12. RESILIENT FLOORING TYPE 1 (LINOLEUM)
13. ARCHITECTURAL CONCRETE PAVING
14. RESILIENT FLOORING TYPE 2 (VCT)
15. 12" x 12" PORCELAIN FLOOR TILE

General Notes

1. AT CARPET TO CONCRETE TRANSITIONS SEE DETAIL: 20A A9.2
2. AT RESILIENT TO CONCRETE TRANSITIONS SEE DETAIL: 20B A9.2
3. AT RESILIENT TO CARPET TRANSITIONS SEE DETAIL: 21 A9.2

NOTE:
AS-BUILTS PLANTER AREA DOES NOT REFLECT FIELD CONDITIONS

BEAM PROFESSIONALS
A DIVISION OF PBK

BEAM Professionals
8163 Rochester Avenue
Suite 100
Rancho Cucamonga, CA 91730
909-987-0909 P
BEAMProf.com

VENTURA COLLEGE LEARNING RESOURCE CENTER RE-ROOF

4667 TELEGRAPH RD
VENTURA, CA 93003
VCCCD

VENTURA COUNTY COMMUNITY COLLEGE DISTRICT
MOORPARK OXNARD VENTURA

CLIENT	VCCCD
PROJECT NUMBER	240378
DATE	1/27/26
DRAWN BY	MF
CHECKED BY	GK/JG

REVISIONS

No.	DESCRIPTION	DATE

ISSUED FOR REVIEW

THIRD LEVEL PATTERN PLAN (FOR REFRENCE ONLY)

RS.1



BEAM PROFESSIONALS
A DIVISION OF PBK

BEAM Professionals
8163 Rochester Avenue
Suite 100
Rancho Cucamonga, CA 91730
909-987-0909 P
BEAMProf.com

VENTURA COLLEGE LEARNING RESOURCE CENTER RE-ROOF

4667 TELEGRAPH RD
VENTURA, CA 93003
VCCCD

VENTURA COUNTY COMMUNITY COLLEGE DISTRICT
MOORPARK OXNARD VENTURA

CLIENT	VCCCD
PROJECT NUMBER	240378
DATE	1/27/26
DRAWN BY	MF
CHECKED BY	GK/JG

REVISIONS

No.	DESCRIPTION	DATE

ISSUED FOR REVIEW

HIGH ROOF FRAMING PLAN (FOR REFERENCE ONLY)

RS.2

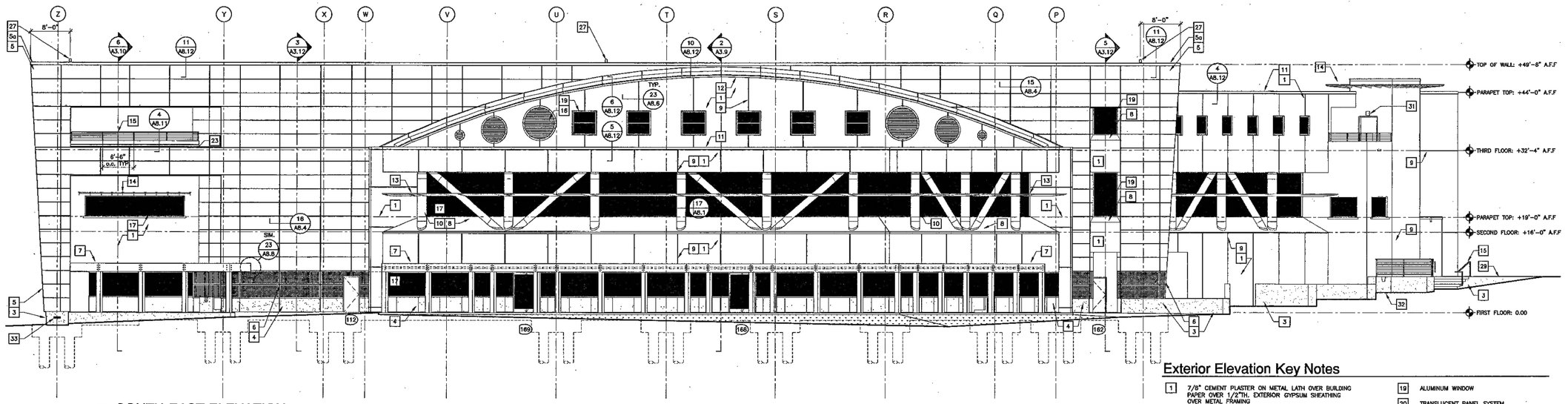

1 SOUTH-EAST ELEVATION
SCALE : 1/8"=1'-0"

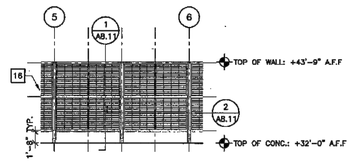

7 MECH. SCREEN WALL ELEVATION (PARTIAL)
SCALE : 1/8"=1'-0"

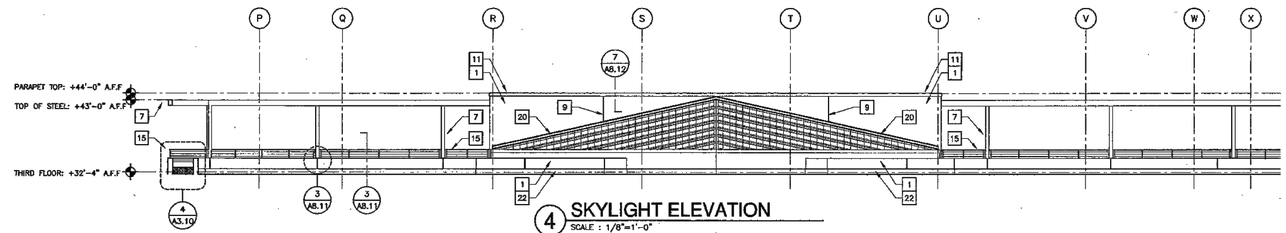

4 SKYLIGHT ELEVATION
SCALE : 1/8"=1'-0"

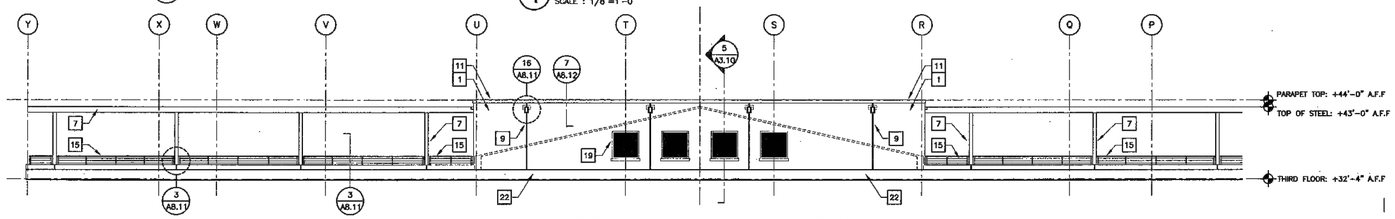

5 EXTERIOR WALKWAY ELEVATION
SCALE : 1/8"=1'-0"

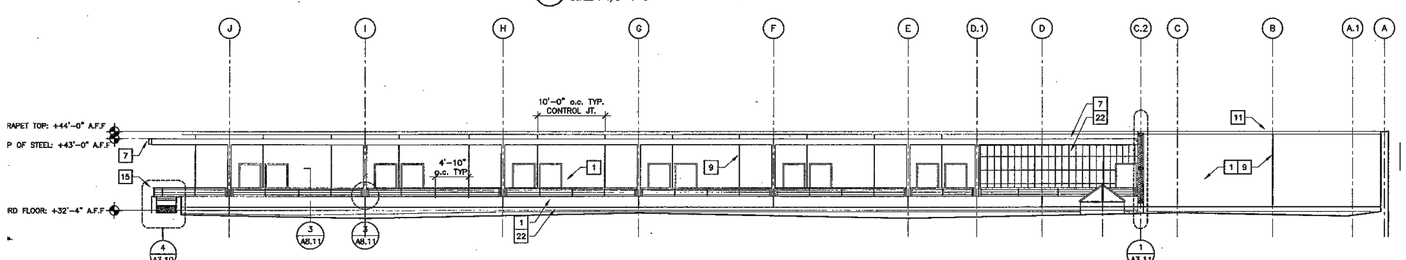

6 WEST WALKWAY ELEVATION
SCALE : 1/8"=1'-0"

Exterior Elevation Key Notes

1. 7/8" CEMENT PLASTER ON METAL LATH OVER BUILDING PAPER OVER 1/2"TH. EXTERIOR GYPSUM SHEATHING OVER METAL FRAMING
2. 1/2"TH CEMENT PLASTER OVER LIQUID BONDING AGENT OVER CONCRETE WALL
3. EXPOSED CAST-IN-PLACE CONCRETE
4. GLASS FIBER REINFORCED CONCRETE (G.F.R.C.) CLADDING PANEL O/ METAL FRAMING
5. METAL CLADDING PANEL OVER BUILDING PAPER OVER 1/2"TH EXTERIOR GYPSUM SHEATHING OVER METAL FRAMING
5a. METAL CLADDING COPING
6. PERFORATED METAL CLADDING PANEL OVER METAL FRAMING
7. GALVANIZED STEEL TRELLIS
8. SAND-COATED MP. MEMBRANE OVER 1/2" EXTERIOR GYPSUM SHEATHING OVER METAL FRAMING
9. ALUMINUM 3/4" CONTROL JOINT
10. METAL COLUMN AND BRACE COVER
11. SHEET METAL COPING
12. SHEET METAL FASCIA
13. LIBRARY SUN-SCREEN SHELF (1 / A8.10)
14. SUN CONTROL (6 / A8.10)
15. GALVANIZED STEEL RAILING W/ SS CABLE
16. ALUMINUM DECORATIVE GRILLE (14 / A8.10)
17. ALUMINUM FRAMED BUTT-GLAZED SYSTEM
18. ALUMINUM STOREFRONT SYSTEM
19. ALUMINUM WINDOW
20. TRANSLUCENT PANEL SYSTEM
21. SCUPPER (4 / A8.13)
22. MEMBRANE ROOFING, VERTICALLY APPLIED
23. SURFACE MOUNTED REGLET w/ FLASHING
24. COLUMN CAPITAL. SEE (19 / A8.1) (18 / A8.1)
25. MEMBRANE ROOFING W/ BATTENS
26. GALVANIZED STEEL GUTTER (3 / A8.9)
27. LIGHT FIXTURE @ TOP OF WALL, SEE ELEC.
28. OVERFLOW DRAIN (2 / A8.13)
29. RETAINING CONCRETE WALL
30. BOOK DEPOSITORY (15 / A8.5)
31. WALL MOUNT. LIGHT FIXTURE 96" A.F.F., SEE ELEC.
32. RAISED CATCH BASIN (22 / A1.5)
33. RECESSED LIGHT FIXTURE, SEE ELEC.
34. DOWNSPOUT, SEE PLUMBING. (20 / A8.11)
35. GALVANIZED T.S. 20x8 PER STRUCTURAL

BEAM Professionals
8163 Rochester Avenue
Suite 100
Rancho Cucamonga, CA 91730
909-987-0909 P
BEAMProf.com

VENTURA COLLEGE LEARNING RESOURCE CENTER RE-ROOF

4667 TELEGRAPH RD
VENTURA, CA 93003
VCCCD

CLIENT	VCCCD
PROJECT NUMBER	240378
DATE	1/27/26
DRAWN BY	MF
CHECKED BY	GK/JG

REVISIONS

No.	DESCRIPTION	DATE

ISSUED FOR REVIEW

EXTERIOR ELEVATIONS
(FOR REFERENCE ONLY)

RS.3

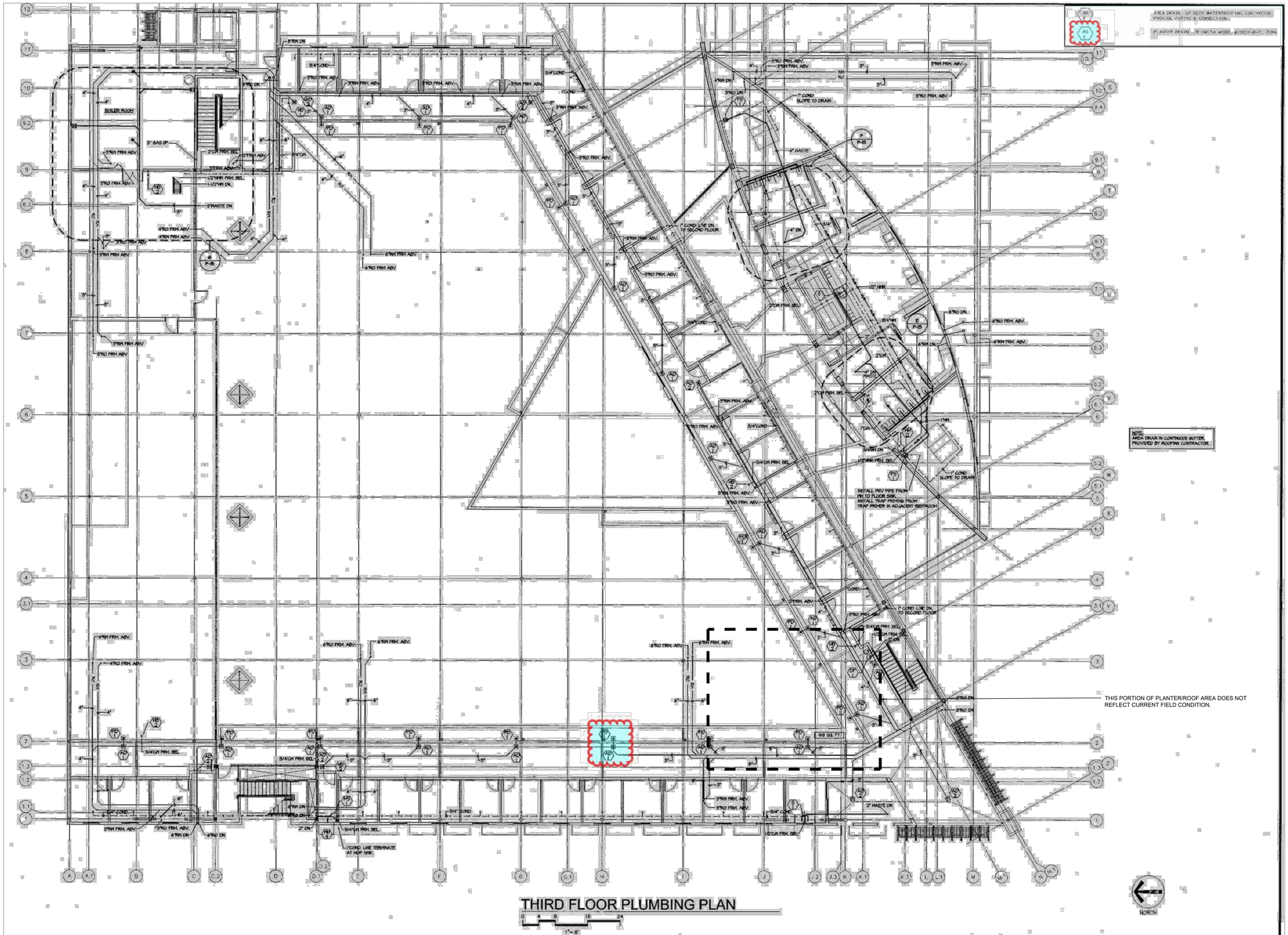

BEAM PROFESSIONALS
A DIVISION OF PBK

BEAM Professionals
8163 Rochester Avenue
Suite 100
Rancho Cucamonga, CA 91730
909-987-0909 P
BEAMProf.com

VENTURA COLLEGE LEARNING RESOURCE CENTER RE-ROOF

4667 TELEGRAPH RD
VENTURA, CA 93003
VCCCD

VENTURA COUNTY COMMUNITY COLLEGE DISTRICT
MOORPARK OXNARD VENTURA

CLIENT	VCCCD
PROJECT NUMBER	240378
DATE	1/27/26
DRAWN BY	MF
CHECKED BY	GK/JG

REVISIONS

No.	DESCRIPTION	DATE

ISSUED FOR REVIEW

PLUMBING PLAN (FOR REFERENCE ONLY)

RS.4